Title: Quantum Interference of â€œClocksâ€•

Date: Jun 26, 2012 09:00 AM

URL: http://pirsa.org/12060050

Abstract: Experimental
tests of general relativity performed so far involve systems that can be
effectively described by classical physics. On the other hand, observed gravity
effects on quantum systems do not go beyond the Newtonian limit of the theory.
In light of the conceptual differences between general relativity and quantum
mechanics, as well as those of finding a unified theoretical framework for the
two theories, it is of particular interest to look for feasible experiments
that can only be explained if both theories apply.

We
propose testing general relativistic time dilation with a single â€œclockâ€• in a
superposition of two paths in space-time, along which time flows at different
rates. We show that the interference visibility in such an experiment will
decrease to the extent to which the path information becomes available from
reading out the time from the â€œclockâ€•. This effect would provide the first test
of the genuine general relativistic notion of time in quantum mechanics. We
consider implementation of the â€œclockâ€• in evolving internal degrees of freedom
of a massive particle and, alternatively, in the external degree of a photon
and analyze the feasibility of the experiment.

Faculty of Physics, University of Vienna &
Institute for Quantum Optics and Quantum Information, Vienna

Quantum interference of clocks

Časlav Brukner

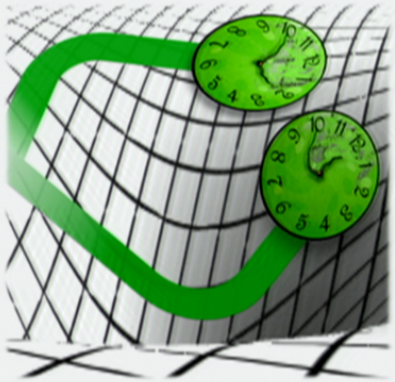

"Relativistic Quantum Information" conference,
June 25-28, 2012, Perimeter Institute

Motivation

Quantum Mechanics

General Relativity

Motivation

Quantum Mechanics

General Relativity

- entanglement
- single particle interference
- Bohr's complementarity principle
- Born's rule

Motivation

Quantum Mechanics

- entanglement
- single particle interference
- Bohr's complementarity principle
- Born's rule

Passed

General Relativity

- Einstein's equations
- gravity as space-time geometry
- gravitational time dilation
- frame-dragging

Passed

Motivation

Quantum Mechanics

- entanglement
- single particle interference
- Bohr's complementarity principle
- Born's rule

Passed

Newtonian gravity sufficient
(if any gravity effects seen at all!)

General Relativity

- Einstein's equations
- gravity as space-time geometry
- gravitational time dilation
- frame-dragging

Passed

Motivation

Quantum Mechanics

- entanglement
- single particle interference
- Bohr's complementarity principle
- Born's rule

Passed

Newtonian gravity sufficient
(if any gravity effects seen at all!)

General Relativity

- Einstein's equations
- gravity as space-time geometry
- gravitational time dilation
- frame-dragging

Passed

Motivation

Quantum Mechanics

- entanglement
- single particle interference
- Bohr's complementarity principle
- Born's rule

Passed

Newtonian gravity sufficient
(if any gravity effects seen at all!)

General Relativity

- Einstein's equations
- gravity as space-time geometry
- gravitational time dilation
- frame-dragging

Passed

consistent with classical
mechanics

Motivation

Quantum Mechanics

General Relativity

(1) Effects that require both theories to be explained?

Outline

- Introduction & motivation
- Two principles: Gravitational time dilation and quantum complementarity
- Interference of „clocks“ as a toolset for testing the overlapp between QM & GR and for testing alternative theories

M. Zych, F. Costa, I. Pikovski, Č. Brukner:
Quantum interferometric visibility as a witness of general relativistic proper time,
Nature Communication 2:505, doi: 10.1038/ncomms1498 (2011)

M. Zych, F. Costa, I. Pikovski, T. Ralph, Č. Brukner,
General relativistic effects in quantum interference of photons,
arXiv 1206.0965

Quantum Complementarity Principle

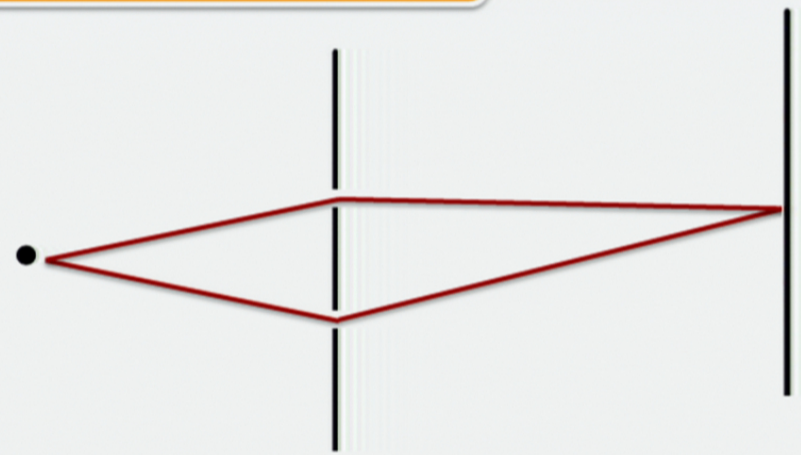

It is **not possible** to simultaneously know the path of the particle and observe its interference.

GR: time shown by the clock depends on the path taken

QM: interference cannot be observed if path can be known

Interference of a „clock“

GR: time shown by the clock depends on the path taken

running clock in a superposition

QM: interference cannot be observed if path can be known

switched off clock
in a superposition

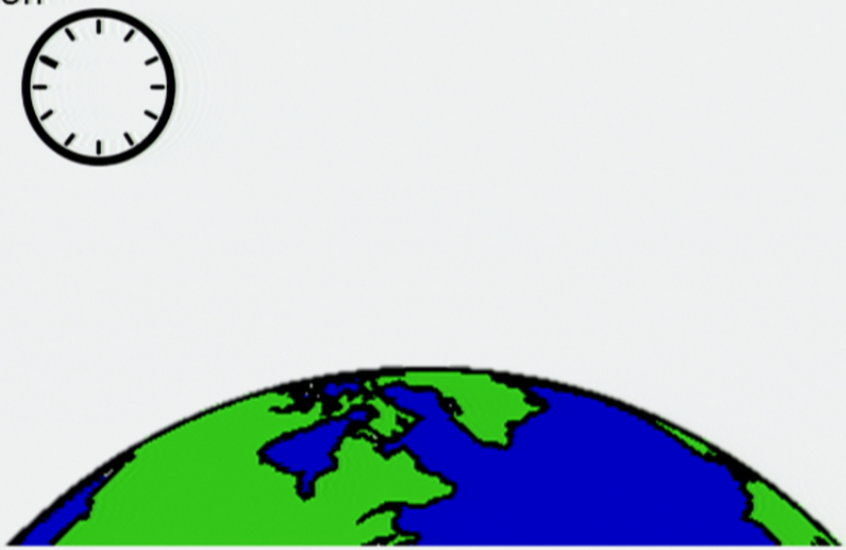

Testing the overlap between QM & GR:

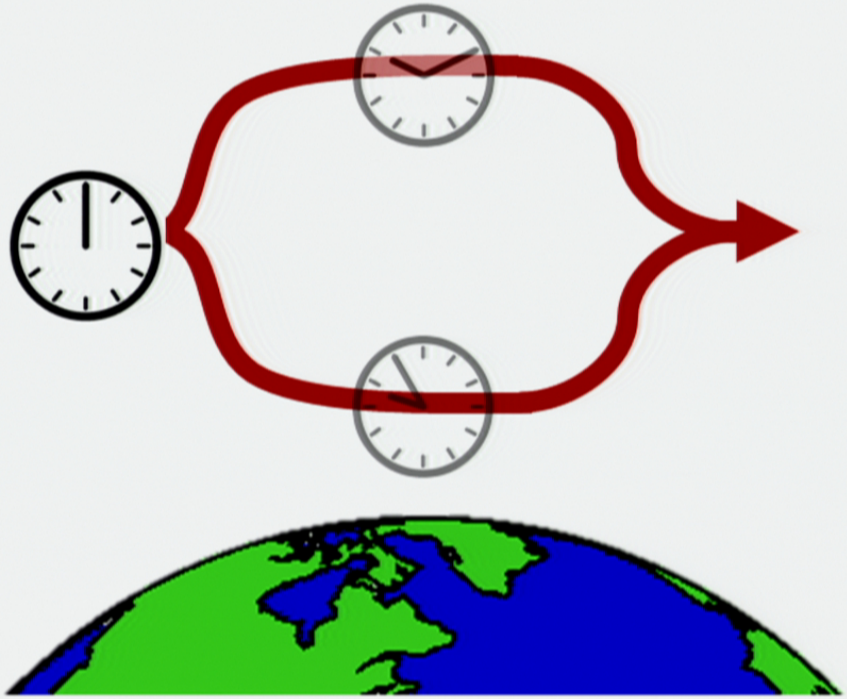

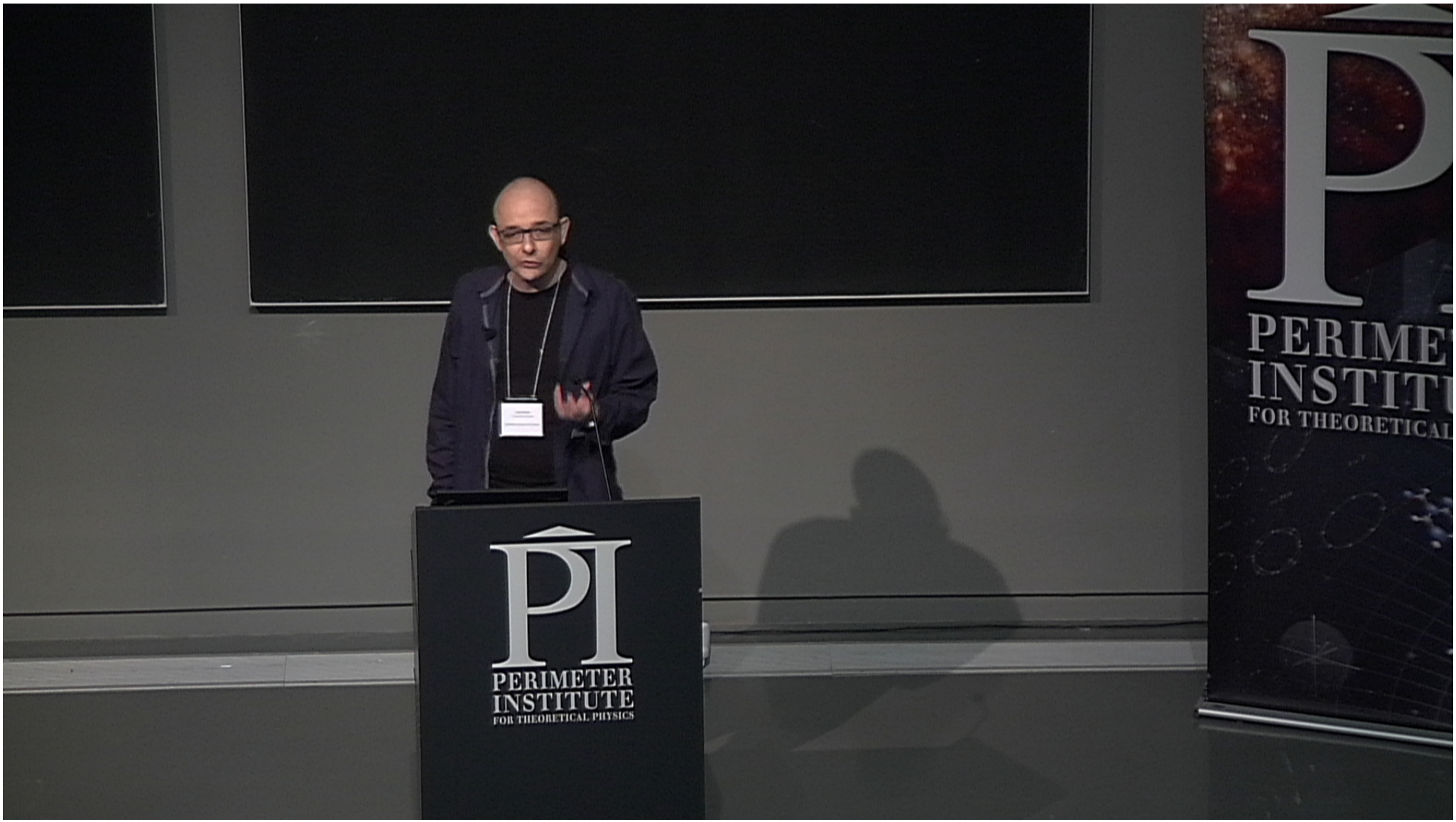
PERIMETER
INSTITUTE
FOR THEORETICAL PHYSICS

Mach-Zehnder interferometer in a gravitational field

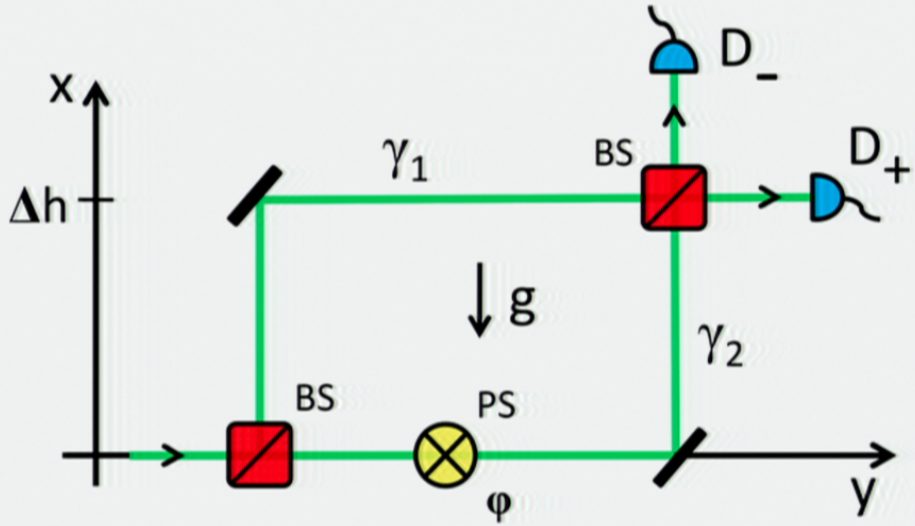

$\gamma_{1,2}$: two possible paths through the setup,
g : homogeneous gravitational field,
Δh : separation between the paths

Complementarity relation

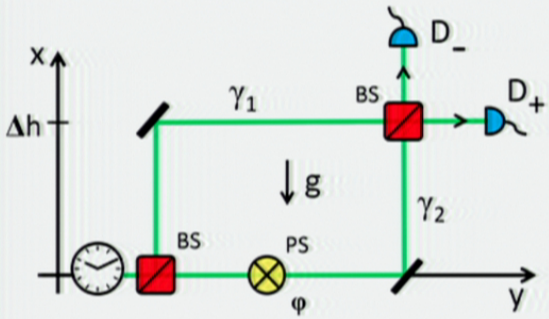

"**clock**"- a system with an evolving in time degree of freedom

modes associated with the path γ_1

$$|\Psi_{MZ}\rangle = \frac{1}{\sqrt{2}}\left(i|r_1\rangle|\tau_1\rangle e^{-i\phi_1} + |r_2\rangle|\tau_2\rangle e^{-i\phi_2+i\varphi}\right)$$

Complementarity relation

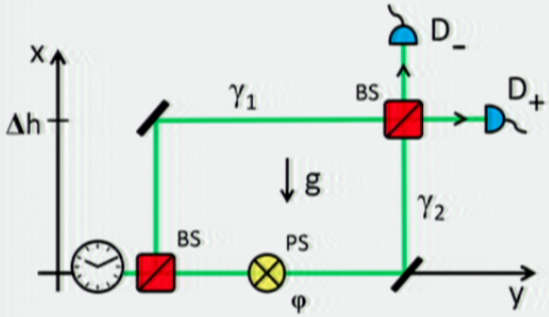

"**clock**"- a system with an evolving in time degree of freedom

modes associated with the path γ_1

state of the "clock", which followed path γ_1

$$|\Psi_{MZ}\rangle = \frac{1}{\sqrt{2}}\left(i|r_1\rangle|\tau_1\rangle e^{-i\phi_1} + |r_2\rangle|\tau_2\rangle e^{-i\phi_2+i\varphi}\right)$$

Probabilities of detection

$$\langle\tau_1|\tau_2\rangle = |\langle\tau_1|\tau_2\rangle|e^{i\alpha}$$

$$P_\pm = \frac{1}{2} \pm \frac{1}{2}|\langle\tau_1|\tau_2\rangle|\cos\left(\Delta\phi + \alpha + \varphi\right)$$

Complementarity relation

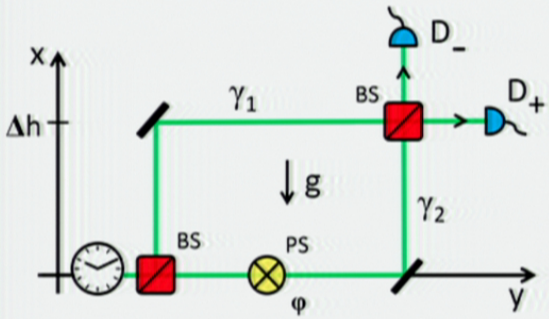

"**clock**"- a system with an evolving in time degree of freedom

modes associated with the path γ_1

state of the "clock", which followed path γ_1

$$|\Psi_{MZ}\rangle = \frac{1}{\sqrt{2}}\left(i|r_1\rangle|\tau_1\rangle e^{-i\phi_1} + |r_2\rangle|\tau_2\rangle e^{-i\phi_2+i\varphi}\right)$$

Probabilities of detection

$$\langle\tau_1|\tau_2\rangle = |\langle\tau_1|\tau_2\rangle|e^{i\alpha}$$

$$P_\pm = \frac{1}{2} \pm \frac{1}{2}|\langle\tau_1|\tau_2\rangle|\cos\left(\Delta\phi + \alpha + \varphi\right)$$

Visibility of the interference pattern:

$$\mathcal{V} = |\langle\tau_1|\tau_2\rangle|$$

Complementarity relation

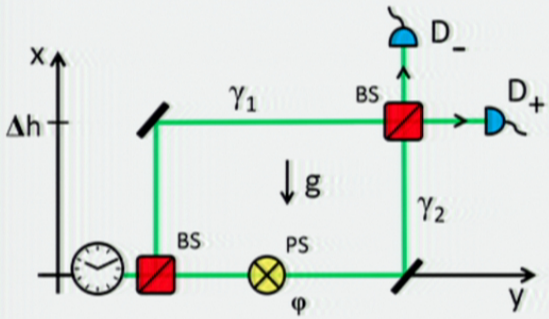

"**clock**"- a system with an evolving in time degree of freedom

modes associated with the path γ_1

state of the "clock", which followed path γ_1

$$|\Psi_{MZ}\rangle = \frac{1}{\sqrt{2}}\left(i|r_1\rangle|\tau_1\rangle e^{-i\phi_1} + |r_2\rangle|\tau_2\rangle e^{-i\phi_2+i\varphi}\right)$$

Probabilities of detection

$$\langle\tau_1|\tau_2\rangle = |\langle\tau_1|\tau_2\rangle|e^{i\alpha}$$

$$P_\pm = \frac{1}{2} \pm \frac{1}{2}|\langle\tau_1|\tau_2\rangle|\cos\left(\Delta\phi + \alpha + \varphi\right)$$

Visibility of the interference pattern: $\mathcal{V} = |\langle\tau_1|\tau_2\rangle|$

Distunguishability of the paths: $\mathcal{D} = \sqrt{1 - |\langle\tau_1|\tau_2\rangle|^2}$

Complementarity relation

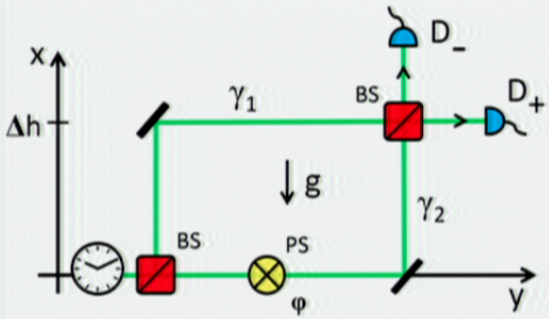

"**clock**"- a system with an evolving in time degree of freedom

modes associated with the path γ_1

state of the "clock", which followed path γ_1

$$|\Psi_{MZ}\rangle = \frac{1}{\sqrt{2}}\left(i|r_1\rangle|\tau_1\rangle e^{-i\phi_1} + |r_2\rangle|\tau_2\rangle e^{-i\phi_2+i\varphi}\right)$$

Probabilities of detection

$$\langle\tau_1|\tau_2\rangle = |\langle\tau_1|\tau_2\rangle|e^{i\alpha}$$

$$P_\pm = \frac{1}{2} \pm \frac{1}{2}|\langle\tau_1|\tau_2\rangle|\cos\left(\Delta\phi + \alpha + \varphi\right)$$

Visibility of the interference pattern: $\mathcal{V} = |\langle\tau_1|\tau_2\rangle|$

Distunguishability of the paths: $\mathcal{D} = \sqrt{1 - |\langle\tau_1|\tau_2\rangle|^2}$

Interferometric visibility drops to the extent to which path information becomes available from the "clock"

Coupling of the “clock” to the gravitational field

Coupling of the “clock” to the gravitational field

Coupling of the "clock" to the gravitational field

$$H_{\text{Lab}} \simeq mc^2 + H_{\circledcirc} + E_k^{GR} + \frac{\phi(x)}{c^2}\left(mc^2 + H_{\circledcirc} + E_{\text{corr}}^{GR}\right),$$

$$H_{\circledcirc} = E_0|0\rangle\langle 0| + E_1|1\rangle\langle 1|$$

Coupling of the "clock" to the gravitational field

Kinetic part

$$H_{\text{Lab}} \simeq \boxed{mc^2 + H_{\circledcirc} + E_k^{GR}} + \boxed{\frac{\phi(x)}{c^2}\left(mc^2 + H_{\circledcirc} + E_{\text{corr}}^{GR}\right)},$$

Potential part

$$H_{\circledcirc} = E_0|0\rangle\langle 0| + E_1|1\rangle\langle 1|$$

$$E_k^{GR} = \frac{p^2}{2m}\left(1 + 3\left(\frac{p}{2mc}\right)^2 - \frac{1}{mc^2}H_{\circledcirc}\right)$$

$$E_{\text{corr}}^{GR} = \frac{1}{2}m\phi(x) - 3\frac{p^2}{2m}\ .$$

Coupling of the "clock" to the gravitational field

Kinetic part

$$H_{\text{Lab}} \simeq \boxed{mc^2 + H_{\circledcirc} + E_k^{GR}} + \boxed{\frac{\phi(x)}{c^2}\left(mc^2 + H_{\circledcirc} + E_{\text{corr}}^{GR}\right)},$$

Potential part

Assumption:
Velocity the same

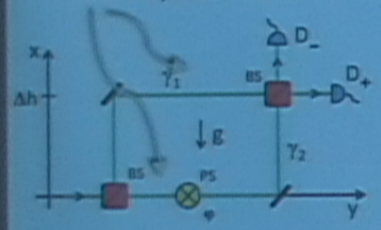

Action depends only on the potential part

$$H_{\circledcirc} = E_0|0\rangle\langle 0| + E_1|1\rangle\langle 1|$$

$$E_k^{GR} = \frac{p^2}{2m}\left(1 + 3\left(\frac{p}{2mc}\right)^2 - \frac{1}{mc^2}H_{\circledcirc}\right)$$

$$E_{\text{corr}}^{GR} = \frac{1}{2}m\phi(x) - 3\frac{p^2}{2m}\,.$$

Coupling of the "clock" to the gravitational field

Kinetic part

$$H_{\text{Lab}} \simeq \boxed{mc^2 + H_{\circledcirc} + E_k^{GR}} + \boxed{\frac{\phi(x)}{c^2}\left(mc^2 + H_{\circledcirc} + E_{\text{corr}}^{GR}\right)},$$

Potential part

Assumption:
Velocity the same

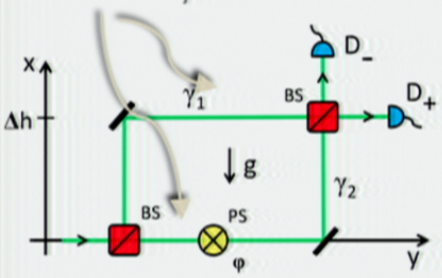

Action depends only on the potential part

$$H_{\circledcirc} = E_0|0\rangle\langle 0| + E_1|1\rangle\langle 1|$$

$$E_k^{GR} = \frac{p^2}{2m}\left(1 + 3\left(\frac{p}{2mc}\right)^2 - \frac{1}{mc^2}H_{\circledcirc}\right)$$

$$E_{\text{corr}}^{GR} = \frac{1}{2}m\phi(x) - 3\frac{p^2}{2m}\ .$$

Coupling of the "clock" to the gravitational field

Kinetic part

$$H_{\text{Lab}} \simeq \boxed{mc^2 + H_{\circledcirc} + E_k^{GR}} + \boxed{\frac{\phi(x)}{c^2}\left(mc^2 + H_{\circledcirc} + E_{\text{corr}}^{GR}\right)},$$

Potential part

Assumption:
Velocity the same

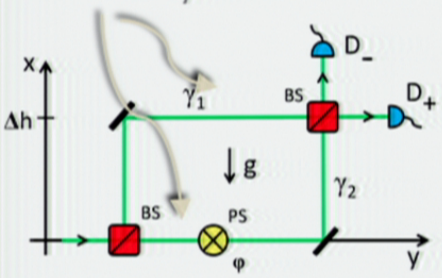

Action depends only on the potential part

$$H_{\circledcirc} = E_0|0\rangle\langle 0| + E_1|1\rangle\langle 1|$$

$$E_k^{GR} = \frac{p^2}{2m}\left(1 + 3\left(\frac{p}{2mc}\right)^2 - \frac{1}{mc^2}H_{\circledcirc}\right)$$

$$E_{\text{corr}}^{GR} = \frac{1}{2}m\phi(x) - 3\frac{p^2}{2m}\ .$$

Coupling of the "clock" to the gravitational field

Kinetic part

$$H_{\text{Lab}} \simeq \boxed{mc^2 + H_{\circledcirc} + E_k^{GR}} + \boxed{\frac{\phi(x)}{c^2}\left(mc^2 + H_{\circledcirc} + E_{\text{corr}}^{GR}\right)},$$

Potential part

Assumption:
Velocity the same

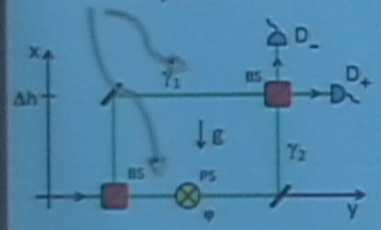

Action depends only on the potential part

$$H_{\circledcirc} = E_0|0\rangle\langle 0| + E_1|1\rangle\langle 1|$$

$$E_k^{GR} = \frac{p^2}{2m}\left(1 + 3\left(\frac{p}{2mc}\right)^2 - \frac{1}{mc^2}H_{\circledcirc}\right)$$

$$E_{\text{corr}}^{GR} = \frac{1}{2}m\phi(x) - 3\frac{p^2}{2m}\ .$$

Coupling of the "clock" to the gravitational field

Rest mass
(COW, Berkley)

Kinetic
part

$$H_{\text{Lab}} \simeq \boxed{mc^2 + H_{\circledcirc} + E_k^{GR}} + \boxed{\frac{\phi(x)}{c^2}\left(mc^2 + H_{\circledcirc} + E_{\text{corr}}^{GR}\right)},$$

Potential
part

Assumption:
Velocity the same

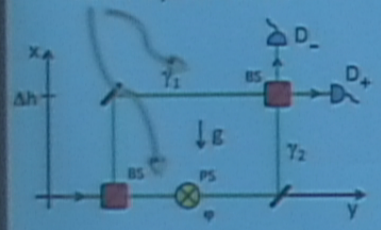

Action depends only
on the potential part

$$H_{\circledcirc} = E_0|0\rangle\langle 0| + E_1|1\rangle\langle 1|$$

$$E_k^{GR} = \frac{p^2}{2m}\left(1 + 3\left(\frac{p}{2mc}\right)^2 - \frac{1}{mc^2}H_{\circledcirc}\right)$$

$$E_{\text{corr}}^{GR} = \frac{1}{2}m\phi(x) - 3\frac{p^2}{2m}.$$

Results

$$H_{\circlearrowleft} = E_0|0\rangle\langle 0| + E_1|1\rangle\langle 1|$$

$$|\tau^{in}\rangle = \frac{1}{\sqrt{2}}(|0\rangle + |1\rangle)$$

Results

$$H_{\circlearrowleft} = E_0|0\rangle\langle 0| + E_1|1\rangle\langle 1|$$

$$|\tau^{in}\rangle = \frac{1}{\sqrt{2}}(|0\rangle + |1\rangle)$$

$$P_{\pm}(\varphi, m, \Delta E, \Delta V, \Delta T) =$$

$$= \frac{1}{2} \pm \frac{1}{2}\cos\left(\frac{\Delta E \Delta V \Delta T}{2\hbar c^2}\right)\cos\left((mc^2 + \langle H_{\circlearrowleft}\rangle + \bar{E}^{GR}_{corr})\frac{\Delta V \Delta T}{\hbar c^2} + \varphi\right)$$

Results

$$H_{\circledcirc} = E_0|0\rangle\langle 0| + E_1|1\rangle\langle 1|$$

$$|\tau^{in}\rangle = \frac{1}{\sqrt{2}}(|0\rangle + |1\rangle)$$

- $\Delta E := E_1 - E_0$
- $\Delta V := g\Delta h$, gravitational potential
- Δh: distance between the paths
- ΔT: time for which the particle travels in superposition at constant heights

$$P_{\pm}(\varphi, m, \Delta E, \Delta V, \Delta T) =$$

$$= \frac{1}{2} \pm \frac{1}{2} \cos\left(\frac{\Delta E \Delta V \Delta T}{2\hbar c^2}\right) \cos\left(\left(mc^2 + \langle H_{\circledcirc}\rangle + \bar{E}^{GR}_{corr}\right)\frac{\Delta V \Delta T}{\hbar c^2} + \varphi\right)$$

relative phase from the Newtonian potential

GR corrections to the relative phase from the path d.o.f.

new effects appearing with the "clock":

change in the interferometric visibility

$$\mathcal{V} = \left|\cos\left(\frac{\Delta E \Delta V \Delta T}{2\hbar c^2}\right)\right|$$

phase shift proportional to the average internal energy

Phase shift vs Drop of visibility

$$|\Psi_{MZ}\rangle = \frac{1}{\sqrt{2}}\left(i|r_1\rangle|\tau_1\rangle e^{-i\phi_1} + |r_2\rangle|\tau_2\rangle e^{-i\phi_2+i\varphi}\right)$$

Phase shift vs Drop of visibility

$$|\Psi_{MZ}\rangle = \frac{1}{\sqrt{2}}\left(i|r_1\rangle|\tau_1\rangle e^{-i\phi_1} + |r_2\rangle|\tau_2\rangle e^{-i\phi_2 + i\varphi}\right)$$

Phase Shift

Explainable by:

- a potential (possible non-Newtonian) in absolute time
- analogue to a charged particle in EM field
- Flat space-time: no redshift
- independent of whether a particle is a „clock“ or a „rock“

Colella, R., Overhauser, A. W. & Werner, S. A. *Phys. Rev. Lett*. 34, 1472–1474 (1975).

Müller, H., Peters, A. & Chu, S. *Nature* 463, 926–929 (2010).

Phase shift vs Drop of visibility

$$|\Psi_{MZ}\rangle = \frac{1}{\sqrt{2}}\left(i|r_1\rangle|\tau_1\rangle e^{-i\phi_1} + |r_2\rangle|\tau_2\rangle e^{-i\phi_2 + i\varphi}\right)$$

Phase Shift

Explainable by:

- a potential (possible non-Newtonian) in absolute time
- analogue to a charged particle in EM field
- Flat space-time: no redshift
- independent of whether a particle is a „clock“ or a „rock“

Drop in Visibility

Not explanaible without:

- gravity as metric theory,
- proper time τ flows at different rates – time dilation
- curved space-time geometry
- iff a particle is an operationally well defined „clock“

Colella, R., Overhauser, A. W. & Werner, S. A.
Phys. Rev. Lett. 34, 1472–1474 (1975).

Müller, H., Peters, A. & Chu, S.
Nature 463, 926–929 (2010).

Testing alternative theories 1

switched off clock
in a superposition

Testing alternative theories 1

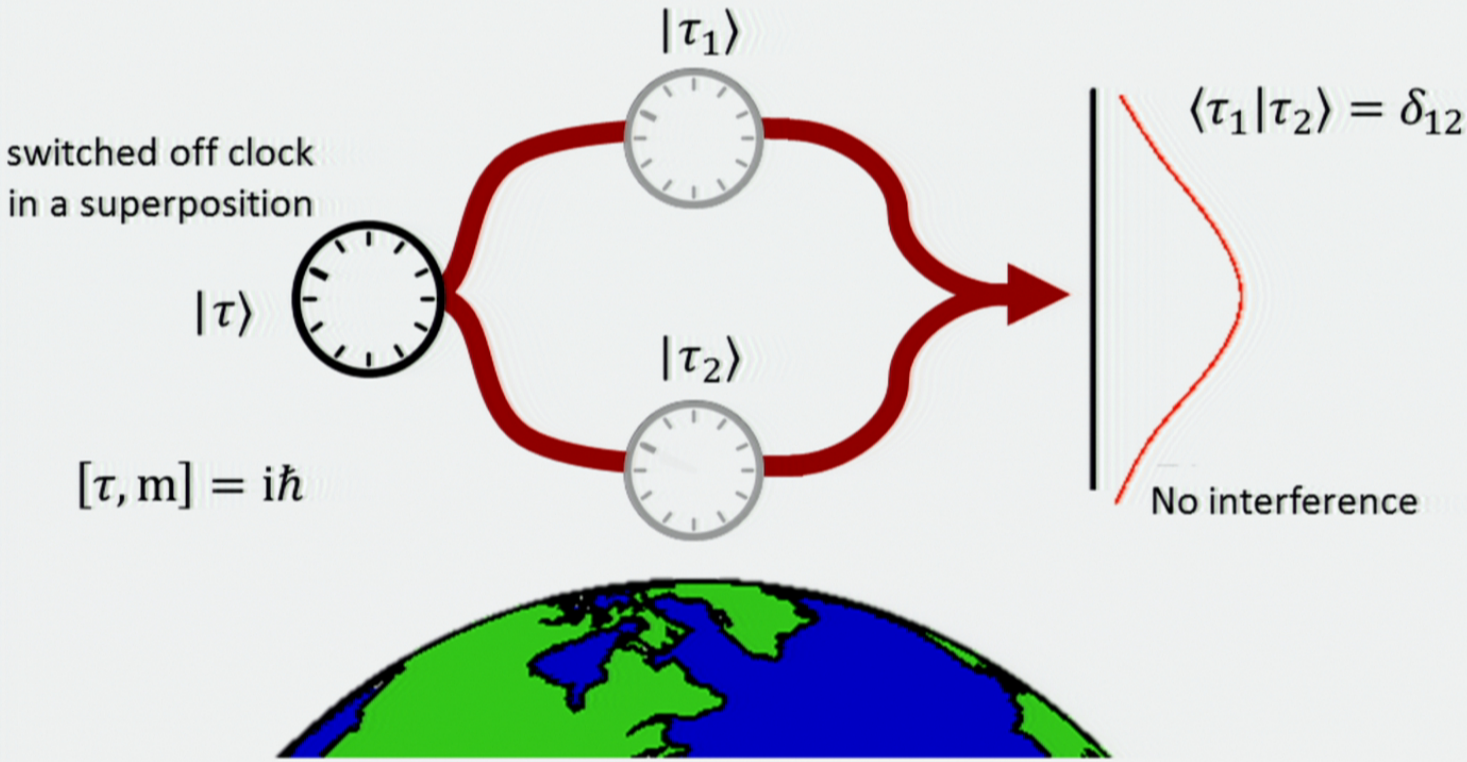

$[\tau, \mathrm{m}] = \mathrm{i}\hbar$

Proper time is additional quantum degree of freedom?
Internal „clock“?

Testing alternative theories 2

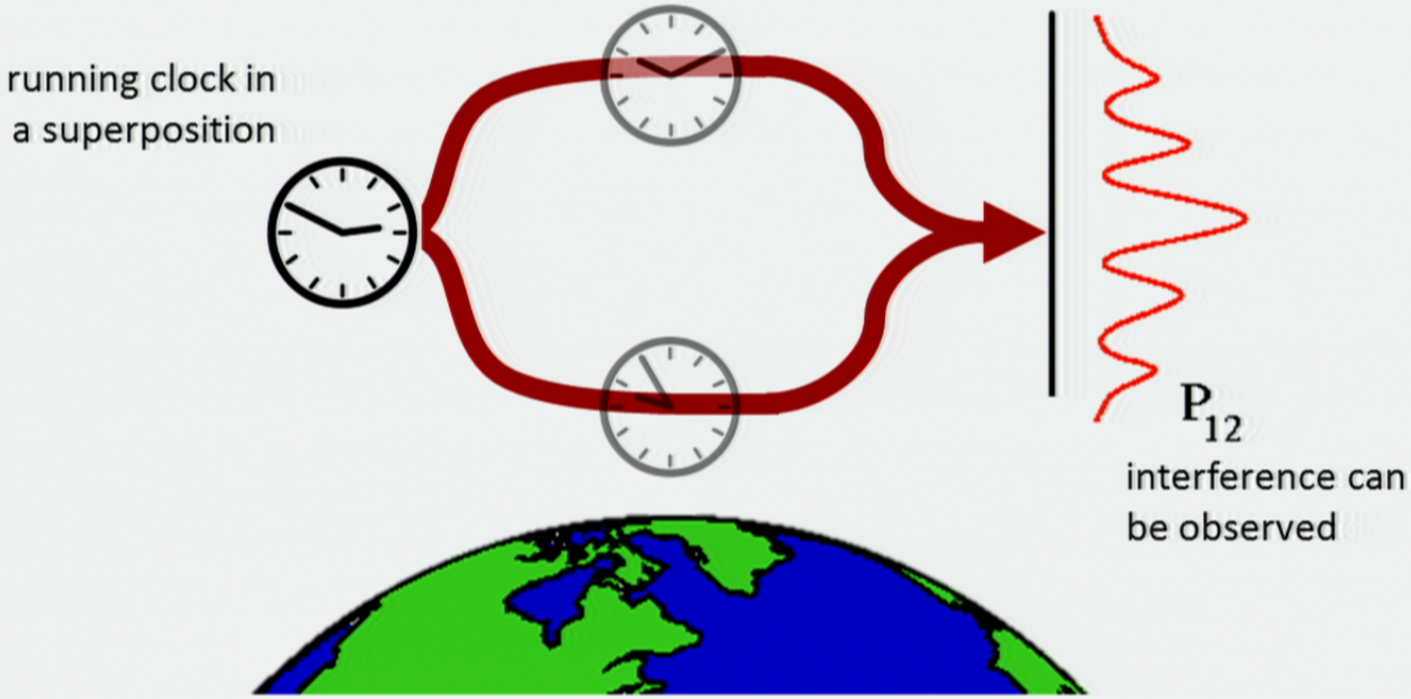

Quantum complementarity principle violated in presence of GR?

Testing alternative theories 3

Mean energy

$$H_{\mathrm{Lab}} \simeq mc^2 + \langle H_{\circledL} \rangle + E_k^{GR} + \frac{\phi(x)}{c^2}\left(mc^2 + \langle H_{\circledL} \rangle + E_{corr}^{GR}\right)$$

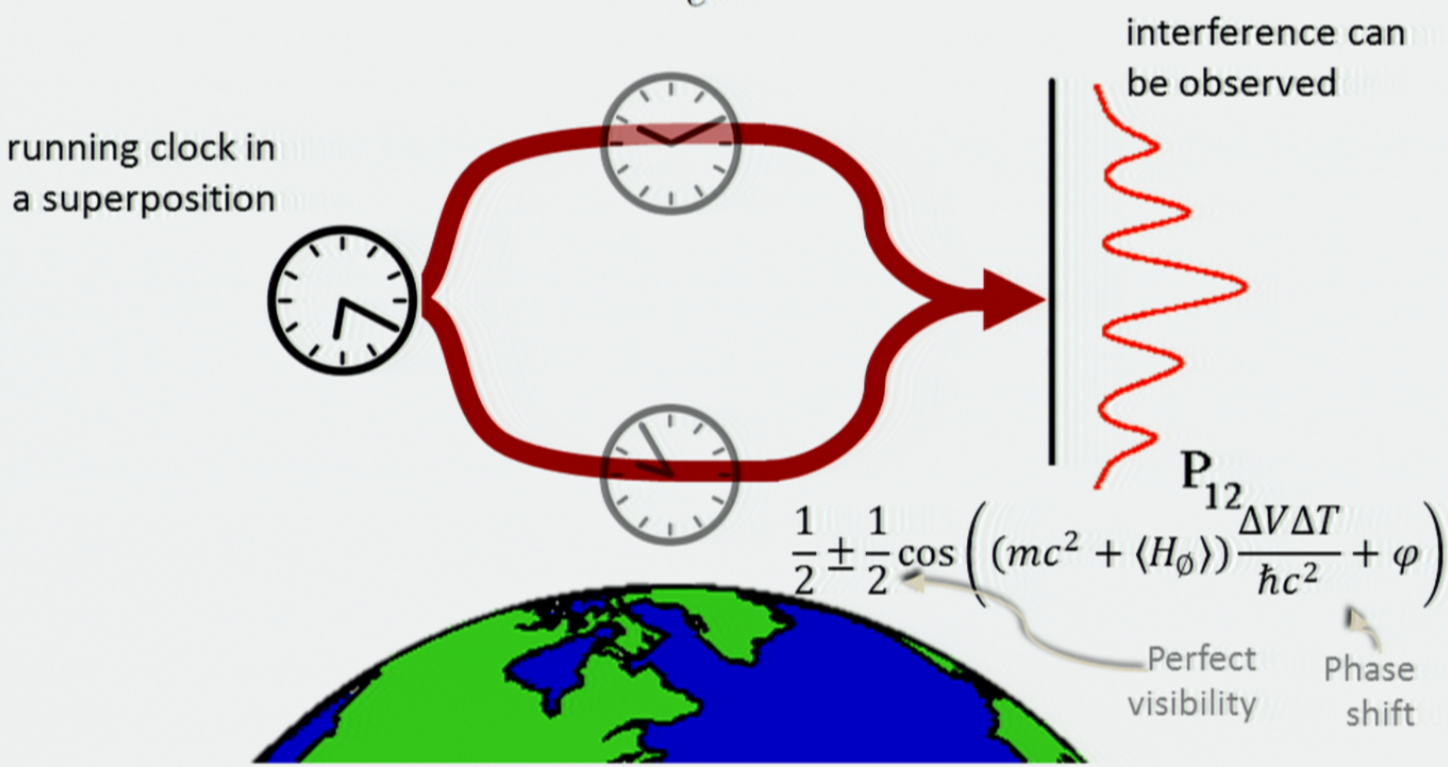

$$\frac{1}{2} \pm \frac{1}{2}\cos\left((mc^2 + \langle H_{\emptyset} \rangle)\frac{\Delta V \Delta T}{\hbar c^2} + \varphi\right)$$

Perfect visibility

Phase shift

Testing alternative theories 3

Mean energy

$$H_{\mathrm{Lab}} \simeq mc^2 + \langle H_{\circledcirc} \rangle + E_k^{GR} + \frac{\phi(x)}{c^2}\left(mc^2 + \langle H_{\circledcirc} \rangle + E_{corr}^{GR}\right)$$

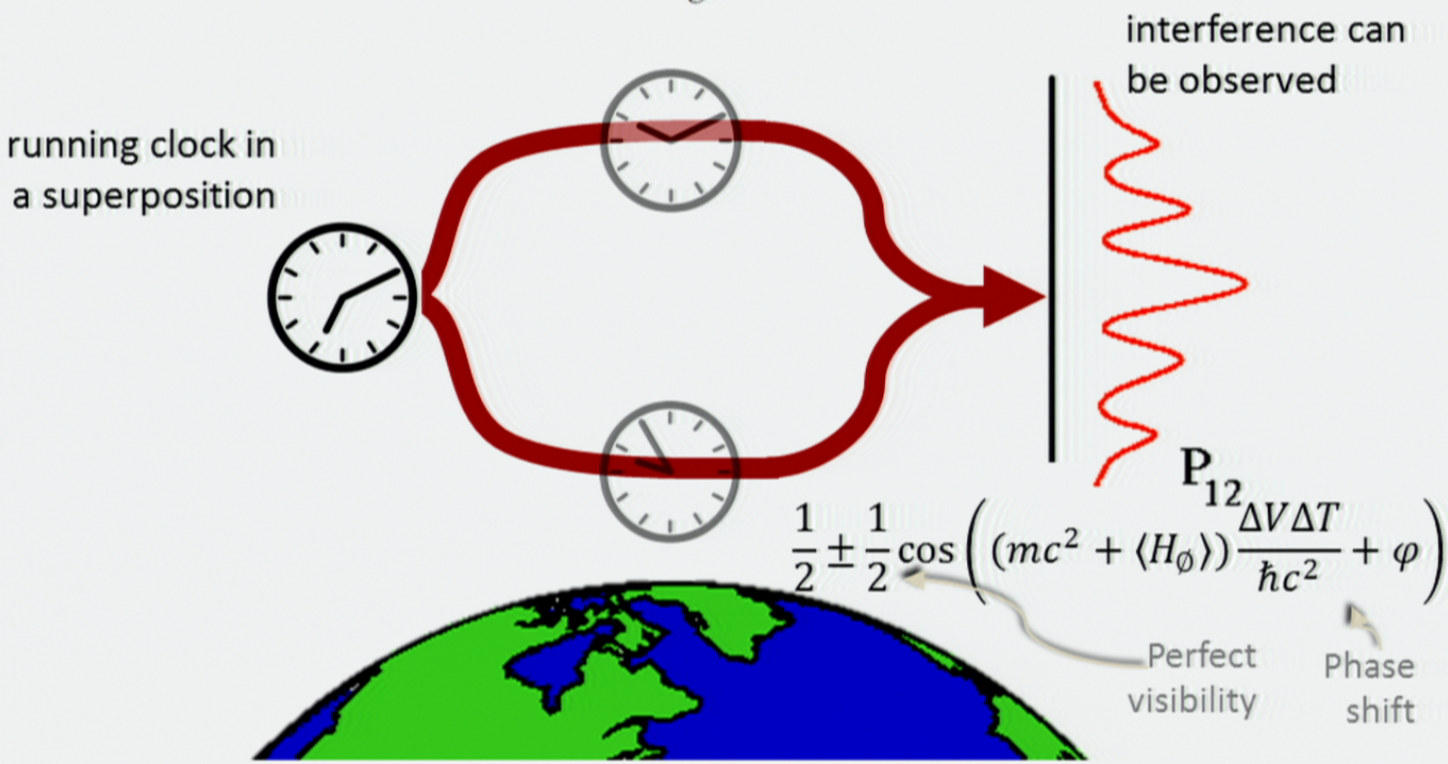

$$\frac{1}{2} \pm \frac{1}{2}\cos\left((mc^2 + \langle H_{\emptyset} \rangle)\frac{\Delta V \Delta T}{\hbar c^2} + \varphi\right)$$

Perfect visibility

Phase shift

Testing alternative theories 3

Mean energy

$$H_{\mathrm{Lab}} \simeq mc^2 + \langle H_{\circledcirc} \rangle + E_k^{GR} + \frac{\phi(x)}{c^2}\left(mc^2 + \langle H_{\circledcirc} \rangle + E_{corr}^{GR}\right)$$

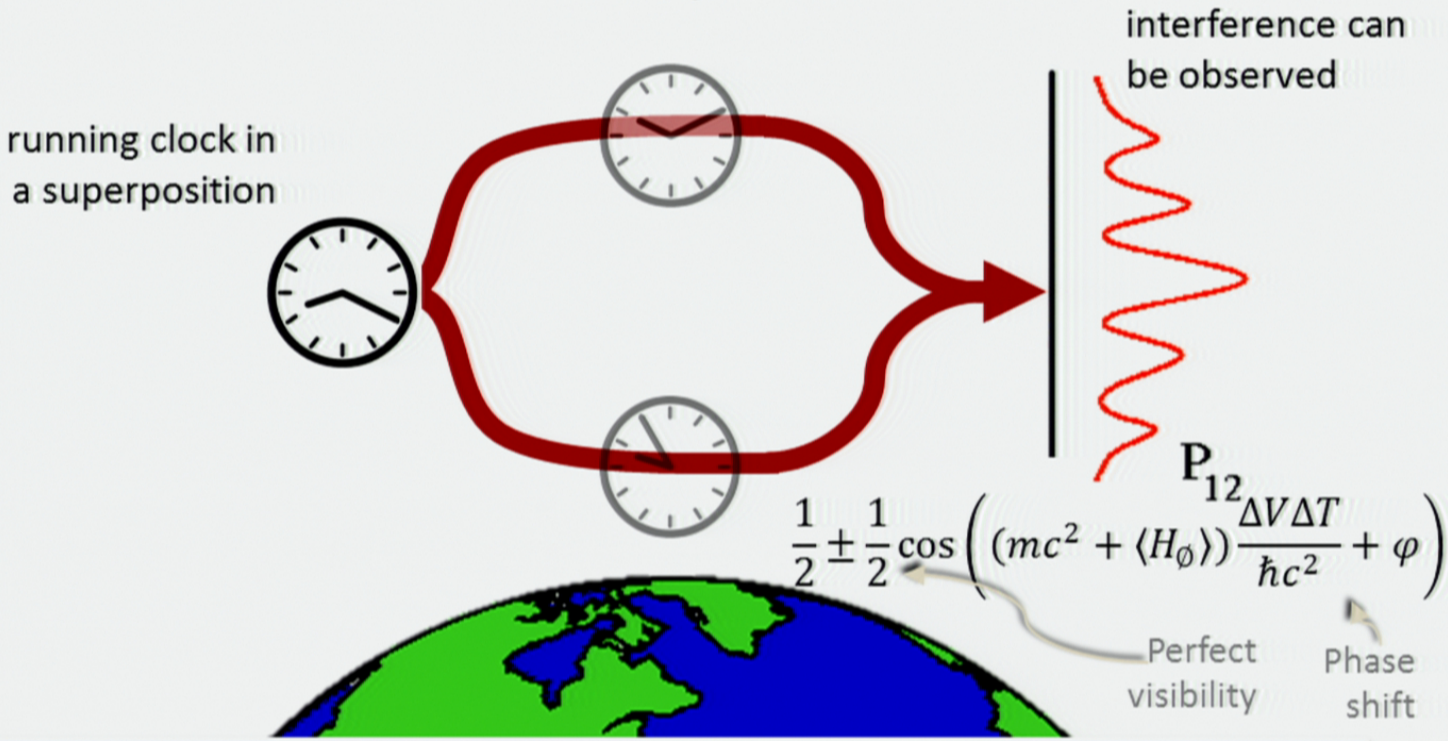

$$\frac{1}{2} \pm \frac{1}{2}\cos\left((mc^2 + \langle H_{\emptyset} \rangle)\frac{\Delta V \Delta T}{\hbar c^2} + \varphi\right)$$

Perfect visibility

Phase shift

Semiclassical (non-linear) theory where gravity couples to the **mean clock energy**?

Discussion of possible outcomes of the interferometric experiment

	Experimental visibility	Possible explanation	Current experimental status
1	$\mathcal{V}_m = 0$	Proper time: quantum d.o.f., sharply defined	Disproved in, for example, refs 7,9
1	$0 < \mathcal{V}_m < \mathcal{V}_{QM}$	Proper time: quantum d.o.f. with uncertainty σ_τ	Consistent with current data for $\sigma_\tau > \lvert \Delta\tau \rvert / \sqrt{-8\ln(1-\Delta\mathcal{V})}$
	$\mathcal{V}_m = \mathcal{V}_{QM}$	Proper time: not a quantum d.o.f. or has a very broad uncertainty	Consistent with current data
2	$\mathcal{V}_m > \mathcal{V}_{QM}$	Quantum interferometric complementarity does not hold when general relativistic effects become relevant	Not tested
3			

measured visibility $\mathcal{V}_m$ is compared with the quantum mechanical prediction $\mathcal{V}_{QM}$ given by equation (13). Depending on their relation, different conclusions can be drawn regarding the possibility that proper time is a quantum degree of freedom (d.o.f.). Assuming that the distribution of the proper time d.o.f. is a Gaussian of the width σ_τ, current interferometric experiments give bounds on possible σ_τ in terms of the proper time difference $\Delta\tau$ between the paths and the experimental error $\Delta\mathcal{V}$ of the visibility measurement.

Discussion of possible outcomes of the interferometric experiment

	Experimental visibility	Possible explanation	Current experimental status
1	$\mathcal{V}_m = 0$	Proper time: quantum d.o.f., sharply defined	Disproved in, for example, refs 7,9
1	$0 < \mathcal{V}_m < \mathcal{V}_{QM}$	Proper time: quantum d.o.f. with uncertainty σ_τ	Consistent with current data for $\sigma_\tau > \lvert \Delta\tau \rvert / \sqrt{-8\ln(1-\Delta\mathcal{V})}$
	$\mathcal{V}_m = \mathcal{V}_{QM}$	Proper time: not a quantum d.o.f. or has a very broad uncertainty	Consistent with current data
2	$\mathcal{V}_m > \mathcal{V}_{QM}$	Quantum interferometric complementarity does not hold when general relativistic effects become relevant	Not tested
3			

measured visibility $\mathcal{V}_m$ is compared with the quantum mechanical prediction $\mathcal{V}_{QM}$ given by equation (13). Depending on their relation, different conclusions can be drawn regarding the possibility that proper time is a quantum degree of freedom (d.o.f.). Assuming that the distribution of the proper time d.o.f. is a Gaussian of the width σ_τ, current interferometric experiments give bounds on possible σ_τ in terms of the proper time difference $\Delta\tau$ between the paths and the experimental error $\Delta\mathcal{V}$ of the visibility measurement.

Implementations

$$\mathcal{V} = \left|\cos\left(\frac{\Delta E \Delta V \Delta T}{2\hbar c^2}\right)\right|$$

Implementations

$$\mathcal{V} = \left|\cos\left(\frac{\Delta E \Delta V \Delta T}{2\hbar c^2}\right)\right|$$

system	clock	ω [Hz]	$\Delta h \Delta T$ [ms] achieved	$\Delta h \Delta T$ [ms] required
atoms	hyperfine states	10^{15}	10^{-5}	10
electrons	spin precession	10^{13}	10^{-6}	10^{3}
molecules	vibrational modes	10^{12}	10^{-8}	10^{4}
neutrons	spin precession	10^{10}	10^{-7}	10^{6}

General Clock

Periodic

$$\mathcal{V} = \left| \cos\left(\frac{\Delta\tau}{t_\perp} \frac{\pi}{2} \right) \right|$$

Internal degree of freedom

General Clock

Time dilation

Periodic

$$\mathcal{V} = \left| \cos\left(\frac{\Delta\tau}{t_\perp} \frac{\pi}{2} \right) \right|$$

Orthogonalization time

Internal degree of freedom

Non-periodic

External degree of freedom

General Clock

Periodic

Time dilation

$$\mathcal{V} = \left| \cos\left(\frac{\Delta\tau}{t_\perp} \frac{\pi}{2} \right) \right|$$

Orthogonalization time

Internal degree of freedom

Non-periodic

External degree of freedom

Position of a photon as a „clock“

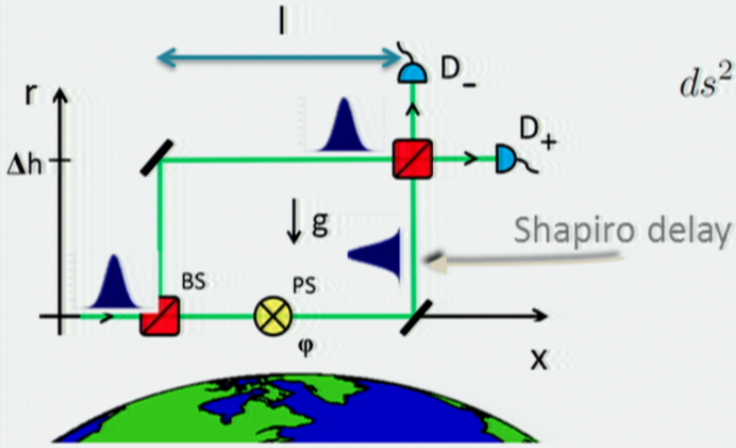

$$ds^2 = d\tau_r^2 - \frac{1}{c^2} dx_r^2 \quad d\tau_r^2 = \left(1 + \frac{2V(r)}{c^2}\right) dt^2$$

$$dx_r^2 = r^2 d\theta^2 \ .$$

Position of a photon as a „clock“

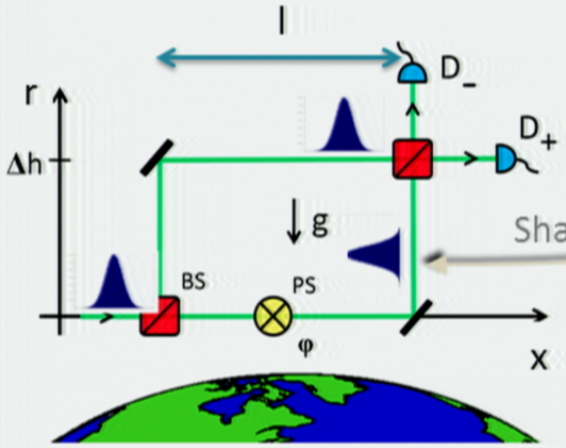

$$ds^2 = d\tau_r^2 - \frac{1}{c^2} dx_r^2 \qquad d\tau_r^2 = \left(1 + \frac{2V(r)}{c^2}\right) dt^2$$

$$dx_r^2 = r^2 d\theta^2 \ .$$

Shapiro delay $\boxed{ds^2 = 0}$

$$t_r = \frac{l}{c\sqrt{1 + \frac{2V(r)}{c^2}}}$$

time along a horizontal trajectory at the radial distance r for a distant observer

Position of a photon as a „clock“

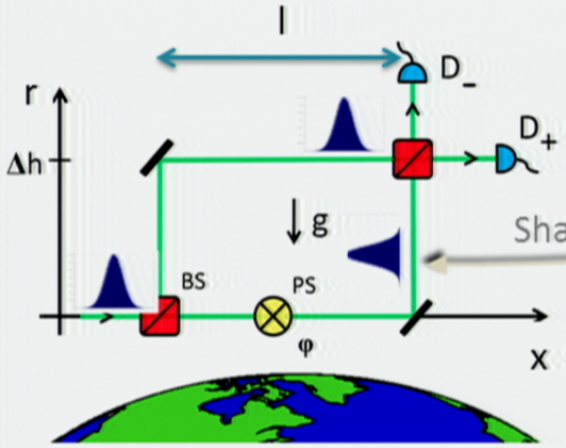

$$ds^2 = d\tau_r^2 - \frac{1}{c^2} dx_r^2 \qquad d\tau_r^2 = \left(1 + \frac{2V(r)}{c^2}\right) dt^2$$

$$dx_r^2 = r^2 d\theta^2 \ .$$

Shapiro delay $\boxed{ds^2 = 0}$

$$t_r = \frac{l}{c\sqrt{1 + \frac{2V(r)}{c^2}}}$$

time along a horizontal trajectory at the radial distance r for a distant observer

$$\Delta\tau = \sqrt{1 + \frac{2V(r+h)}{c^2}}\,(t_r - t_{r+h}) \approx \frac{lgh}{c^3}\,, \quad g = \frac{GM}{r^2}$$

difference in photon arrival times for the local observer at the upper path

Position of a photon as a „clock“

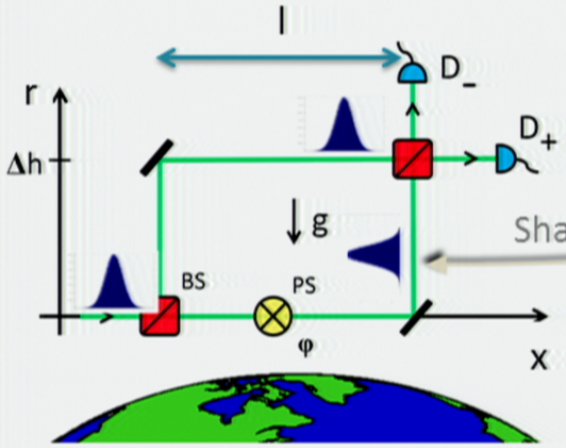

$$ds^2 = d\tau_r^2 - \frac{1}{c^2} dx_r^2 \qquad d\tau_r^2 = \left(1 + \frac{2V(r)}{c^2}\right) dt^2$$

$$dx_r^2 = r^2 d\theta^2 \ .$$

Shapiro delay

$$\boxed{ds^2 = 0}$$

$$t_r = \frac{l}{c\sqrt{1 + \frac{2V(r)}{c^2}}}$$

time along a horizontal trajectory at the radial distance r for a distant observer

$$\Delta\tau = \sqrt{1 + \frac{2V(r+h)}{c^2}}\,(t_r - t_{r+h}) \approx \frac{lgh}{c^3}\,, \quad g = \frac{GM}{r^2}$$

difference in photon arrival times for the local observer at the upper path

States at the detectors

$$|1\rangle_{f\pm} \propto \int d\nu f(\nu) \left(e^{i\frac{\nu}{c}(x_r - c\tau_r)} \pm e^{i\frac{\nu}{c}(x_r - c(\tau_r + \Delta\tau))}\right) a_\nu^\dagger |0\rangle$$

Phase shift & Visibility

Gaussian wave packet: $f_\sigma^{\nu_0}(\nu) \;=\; (\frac{\sigma}{\pi})^{1/4} \exp[-\frac{\sigma}{2}(\nu-\nu_0)^2]$

$$P_{f_\sigma^{\nu_0}\pm} = \frac{1}{2}\left(1 \pm e^{-(\Delta\tau/2\sqrt{\sigma})^2} \cos(\nu_0 \Delta\tau)\right)$$

Phase shift & Visibility

Gaussian wave packet: $f_\sigma^{\nu_0}(\nu) = (\frac{\sigma}{\pi})^{1/4} \exp[-\frac{\sigma}{2}(\nu - \nu_0)^2]$

$$P_{f_\sigma^{\nu_0}\pm} = \frac{1}{2}\left(1 \pm e^{-(\Delta\tau/2\sqrt{\sigma})^2} \boxed{\cos(\nu_0 \Delta\tau)}\right)$$

$\sigma \gg \Delta\tau$

Phase shift:

$\Delta\Phi \approx \nu_0 \frac{lgh}{c^3}$

Phase shift & Visibility

Gaussian wave packet: $f_\sigma^{\nu_0}(\nu) = (\frac{\sigma}{\pi})^{1/4} \exp[-\frac{\sigma}{2}(\nu - \nu_0)^2]$

$$P_{f_\sigma^{\nu_0}\pm} = \frac{1}{2}\left(1 \pm e^{-(\Delta\tau/2\sqrt{\sigma})^2} \boxed{\cos(\nu_0 \Delta\tau)}\right)$$

$\sigma \gg \Delta\tau$

Phase shift:

$$\Delta\Phi \approx \nu_0 \frac{lgh}{c^3}$$

Like of the particle with mass: $\hbar\nu_0/c^2$

Mass-energy equivalence

Phase shift & Visibility

Gaussian wave packet: $f_\sigma^{\nu_0}(\nu) = (\frac{\sigma}{\pi})^{1/4} \exp[-\frac{\sigma}{2}(\nu - \nu_0)^2]$

$$P_{f_\sigma^{\nu_0}\pm} = \frac{1}{2}\left(1 \pm \boxed{e^{-(\Delta\tau/2\sqrt{\sigma})^2}}\boxed{\cos(\nu_0 \Delta\tau)}\right)$$

Visibility drop $\sigma \approx \Delta\tau$

$\sigma \gg \Delta\tau$ Phase shift:

$\Delta\Phi \approx \nu_0 \frac{lgh}{c^3}$

Like of the particle with mass: $\hbar\nu_0/c^2$

Mass-energy equivalence

Phase shift & Visibility

Gaussian wave packet: $f_\sigma^{\nu_0}(\nu) = (\frac{\sigma}{\pi})^{1/4} \exp[-\frac{\sigma}{2}(\nu - \nu_0)^2]$

$$P_{f_\sigma^{\nu_0}\pm} = \frac{1}{2}\left(1 \pm \boxed{e^{-(\Delta\tau/2\sqrt{\sigma})^2}}\boxed{\cos(\nu_0 \Delta\tau)}\right)$$

Visibility drop $\sigma \approx \Delta\tau$

$\sigma \gg \Delta\tau$ Phase shift:

$$\Delta\Phi \approx \nu_0 \frac{lgh}{c^3}$$

$$\mathcal{V} = e^{-\left(\frac{\Delta\tau}{t_\perp}\right)^2} \quad t_\perp = 2\sqrt{\sigma} \quad A_\perp \approx t_\perp \frac{c^3}{g}$$

Like of the particle with mass: $\hbar\nu_0/c^2$

Time dilation

Mass-energy equivalence

	system	clock	$t_\perp$ [s]	$A_\perp$ [km^2]
time dilation	photon	position	10^{-15}	10^3
	atom	hyperfine states	10^{-15}	10^{-7}

	photon frequency [Hz]	A_{ps} [km^2]
phase shift	10^{15}	10^{-4}

Phase shift & Visibility

Gaussian wave packet: $f_\sigma^{\nu_0}(\nu) = (\frac{\sigma}{\pi})^{1/4} \exp[-\frac{\sigma}{2}(\nu - \nu_0)^2]$

$$P_{f_\sigma^{\nu_0}\pm} = \frac{1}{2}\left(1 \pm \boxed{e^{-(\Delta\tau/2\sqrt{\sigma})^2}}\boxed{\cos(\nu_0 \Delta\tau)}\right)$$

Visibility drop $\sigma \approx \Delta\tau$

$\sigma \gg \Delta\tau$ Phase shift:

$$\Delta\Phi \approx \nu_0 \frac{lgh}{c^3}$$

$$\mathcal{V} = e^{-\left(\frac{\Delta\tau}{t_\perp}\right)^2} \quad t_\perp = 2\sqrt{\sigma} \quad A_\perp \approx t_\perp \frac{c^3}{g}$$

Like of the particle with mass: $\hbar\nu_0/c^2$

Time dilation

Mass-energy equivalence

	system	clock	$t_\perp$ [s]	$A_\perp$ [km^2]
time dilation	photon	position	10^{-15}	10^3
	atom	hyperfine states	10^{-15}	10^{-7}

	photon frequency [Hz]	A_{ps} [km^2]
phase shift	10^{15}	10^{-4}

Phase shift & Visibility

Gaussian wave packet: $f_\sigma^{\nu_0}(\nu) = \left(\frac{\sigma}{\pi}\right)^{1/4} \exp[-\frac{\sigma}{2}(\nu-\nu_0)^2]$

$$P_{f_\sigma^{\nu_0}\pm} = \frac{1}{2}\left(1 \pm e^{-(\Delta\tau/2\sqrt{\sigma})^2}\cos(\nu_0\Delta\tau)\right)$$

Visibility drop

$\sigma \approx \Delta\tau$

$\sigma \gg \Delta\tau$

Phase shift:

$$\Delta\Phi \approx \nu_0 \frac{lgh}{c^3}$$

$$\mathcal{V} = e^{-\left(\frac{\Delta\tau}{t_\perp}\right)^2} \quad t_\perp = 2\sqrt{\sigma} \quad A_\perp \approx t_\perp \frac{c^3}{g}$$

Like of the particle with mass: $\hbar\nu_0/c^2$

Time dilation

Mass-energy equivalence

	system	clock	$t_\perp$ [s]	$A_\perp$ [km^2]
time dilation	photon	position	10^{-15}	10^3
	atom	hyperfine states	10^{-15}	10^{-7}

	photon frequency [Hz]	A_{ps} [km^2]
phase shift	10^{15}	10^{-4}

Summary

Probing the overlap between quantum mechanics and general relativity:

- Interference of „clock“ – drop of visibility as a witness of general relativistic time dilation in quantum mechanics

Summary

Probing the overlap between quantum mechanics and general relativity:

- Interference of „clock“ – drop of visibility as a witness of general relativistic time dilation in quantum mechanics
- Clock in internal degree of freedom of a massive particle / external degree of freedom of a photon
- Testing alternative theories


PERIMETER
INSTITUTE
FOR THEORETICAL PHYSICS

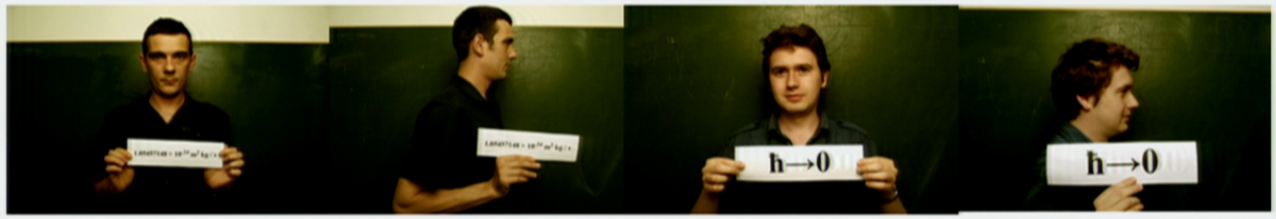

Borivoje Dakic

Igor Pikovski

Fabio Costa

Magdalena Zych

Ognyan Oreshkov (U. Brüssels)

C.B.

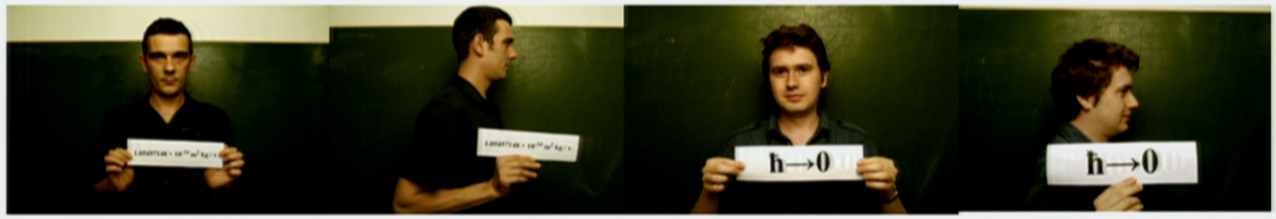

Borivoje Dakic

Igor Pikovski

Fabio Costa

Magdalena Zych

Ognyan Oreshkov (U. Brüssels)

C.B.

CoQuS Complex Quantum Systems

FQXi John Templeton Foundation
Foundational Questions Institute

Thank you for your attention

quantumfoundations.weebly.com