Title: A photonic cluster state machine gun

Date: Dec 09, 2008 11:10 AM

URL: http://pirsa.org/08120054

Abstract: We present a method which can be used to convert certain single photon sources, such as quantum dots, into devices capable of emitting large strings of photonic cluster states in a controlled and pulsed â€œon demandâ€• manner. Such sources greatly alleviate the resources required to achieve linear optical quantum computation. Standard spin errors, such as dephasing, are shown to affect only 1 or 2 of the emitted photons at a time. This allows for the use of standard fault tolerance techniques, and shows that the machine gun can be fired for arbitrarily long times. Using realistic parameters for current semiconductor quantum dot sources, we conclude high entangled-photon emission rates are achievable, with Pauli-error rates less than 0.2%.

Circuit based model

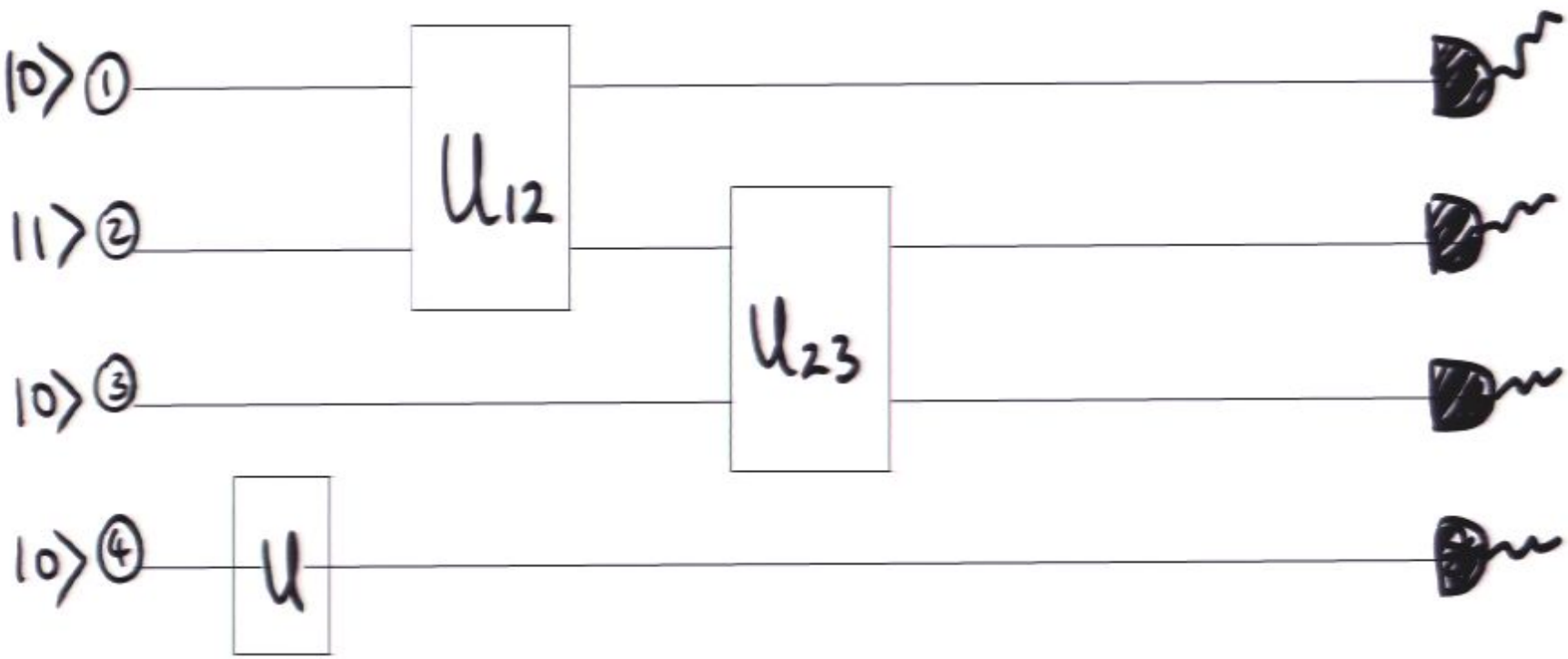

Introduction to cluster states

Circuit Model		Cluster Model
Qubits start in product state	INPUT	Qubits start in entangled state

Introduction to cluster states

Circuit Model		Cluster Model
Qubits start in product state	INPUT	Qubits start in entangled state
Single &2 qubits unitary gates (entangled state)	COMPUTE	Single qubit measurements (destroy entangled state)

Introduction to cluster states

Circuit Model		Cluster Model
Qubits start in product state	INPUT	Qubits start in a generic entangled state
Single &2 qubits unitary gates (entangled state)	COMPUTE	Single qubit measurements (destroy entangled state)
Single qubit measurements	OUTPUT	Single qubit measurements

Cluster state model

- The initial entangled state:

Graphical representation:

Qubit in state $|+\rangle = |0\rangle + |1\rangle$

C_z gate

$$|00\rangle \rightarrow |00\rangle$$
$$|01\rangle \rightarrow |01\rangle$$
$$|10\rangle \rightarrow |10\rangle$$
$$|11\rangle \rightarrow -|11\rangle$$

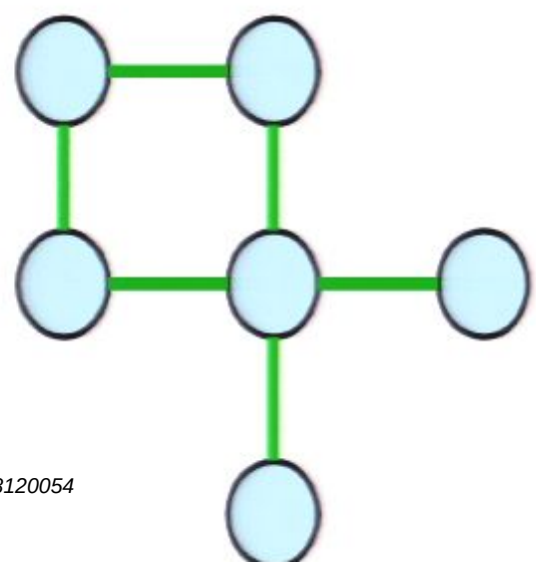

Order doesn't matter as $\left[C_z^{1,2}, C_z^{1,2} \right] = 0$

Simple examples

1) Two qubits:

$$|+\rangle \otimes |+\rangle = |00\rangle + |01\rangle + |10\rangle + |11\rangle$$

$$|00\rangle + |01\rangle + |10\rangle - |11\rangle = \underbrace{|+0\rangle + |-1\rangle}_{\text{Bell state}}$$

1) Three qubits:

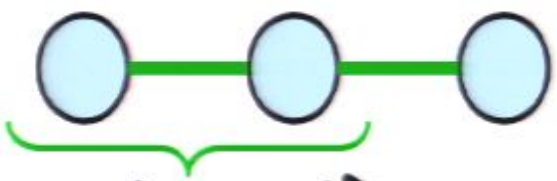

$$|+0\rangle + |-1\rangle \otimes |+\rangle$$

$$= |+0+\rangle + |-1-\rangle$$

C_z *acts as controlled*

$$|+\rangle \leftrightarrow |-\rangle$$

Cluster state model

- The initial entangled state:

Graphical representation:

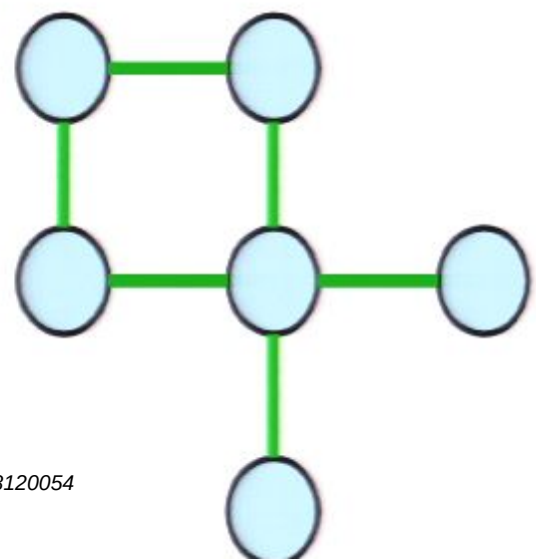

Qubit in state $|+\rangle = |0\rangle + |1\rangle$

C_z gate

$$|00\rangle \rightarrow |00\rangle$$
$$|01\rangle \rightarrow |01\rangle$$
$$|10\rangle \rightarrow |10\rangle$$
$$|11\rangle \rightarrow -|11\rangle$$

Order doesn't matter as $\left[C_z^{1,2}, C_z^{1,2} \right] = 0$

Simple examples

1) Two qubits:

$$|+\rangle \otimes |+\rangle = |00\rangle + |01\rangle + |10\rangle + |11\rangle$$

$$|00\rangle + |01\rangle + |10\rangle - |11\rangle = \underbrace{|+0\rangle + |-1\rangle}_{\text{Bell state}}$$

1) Three qubits:

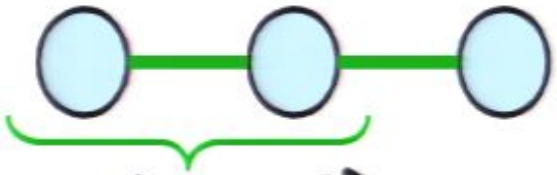

$$|+0\rangle + |-1\rangle \otimes |+\rangle$$

$$= |+0+\rangle + |-1-\rangle$$

C_z *acts as controlled*

$$|+\rangle \leftrightarrow |-\rangle$$

Cluster state model

- The initial entangled state:

Graphical representation:

Qubit in state $|+\rangle = |0\rangle + |1\rangle$

C_z gate

$$|00\rangle \rightarrow |00\rangle$$
$$|01\rangle \rightarrow |01\rangle$$
$$|10\rangle \rightarrow |10\rangle$$
$$|11\rangle \rightarrow -|11\rangle$$

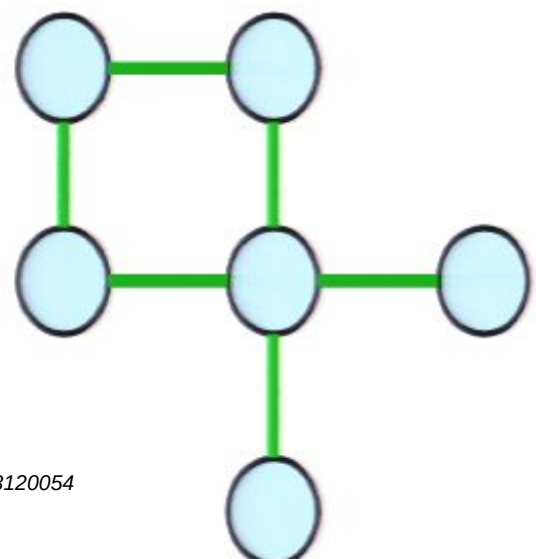

Order doesn't matter as $\left[C_z^{1,2}, C_z^{1,2} \right] = 0$

Cluster state model

- The initial entangled state:

Graphical representation:

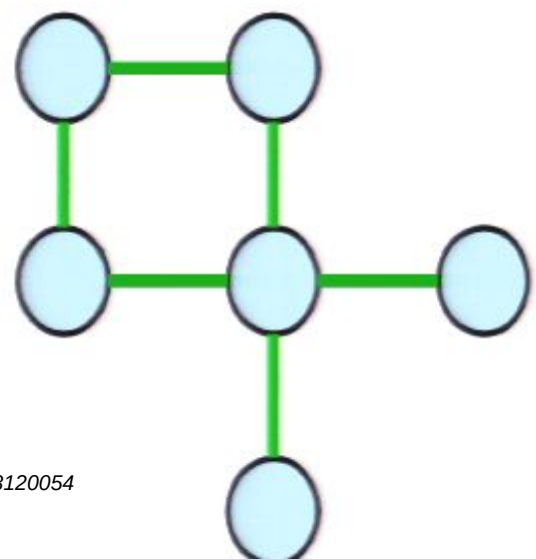

Qubit in state $|+\rangle = |0\rangle + |1\rangle$

C_z gate

$$|00\rangle \rightarrow |00\rangle$$
$$|01\rangle \rightarrow |01\rangle$$
$$|10\rangle \rightarrow |10\rangle$$
$$|11\rangle \rightarrow -|11\rangle$$

Order doesn't matter as $\left[C_z^{1,2}, C_z^{1,2} \right] = 0$

Simple examples

1) Two qubits:

$$|+\rangle \otimes |+\rangle = |00\rangle + |01\rangle + |10\rangle + |11\rangle$$

$$|00\rangle + |01\rangle + |10\rangle - |11\rangle = \underbrace{|+0\rangle + |-1\rangle}_{\text{Bell state}}$$

1) Three qubits:

$$|+0\rangle + |-1\rangle \otimes |+\rangle$$

$$= |+0+\rangle + |-1-\rangle$$

C_z *acts as controlled*

$$|+\rangle \leftrightarrow |-\rangle$$

How do we use these entangled states?

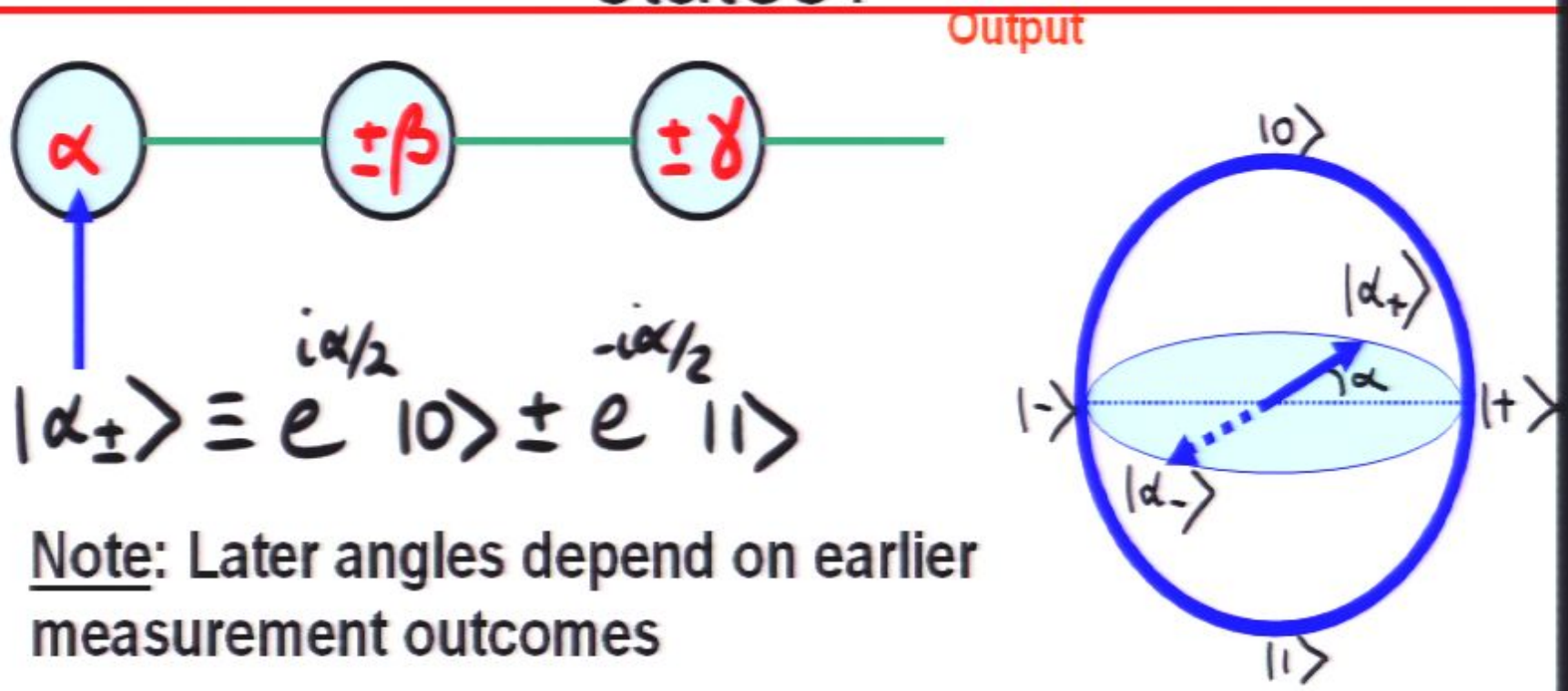

$$|\alpha_\pm\rangle \equiv e^{i\alpha/2}|0\rangle \pm e^{-i\alpha/2}|1\rangle$$

<u>Note</u>: Later angles depend on earlier measurement outcomes

Equivalent Circuit

$$Z_\alpha = e^{-i\alpha/2\,\sigma_z} \qquad H = \begin{bmatrix} 1 & 1 \\ 1 & -1 \end{bmatrix}/\sqrt{2}$$

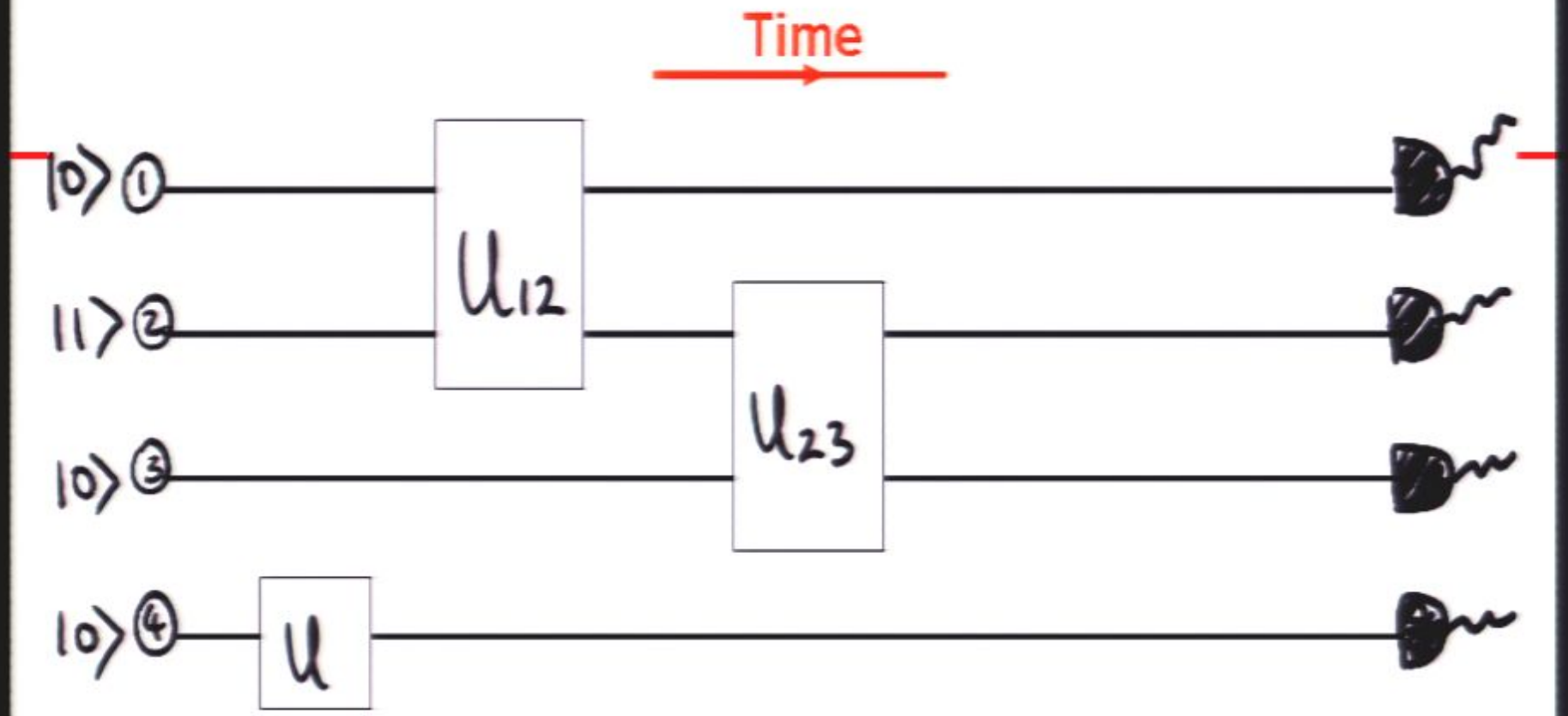
Time
|0⟩ ①
|1⟩ ②
|0⟩ ③
|0⟩ ④
U12
U23
U

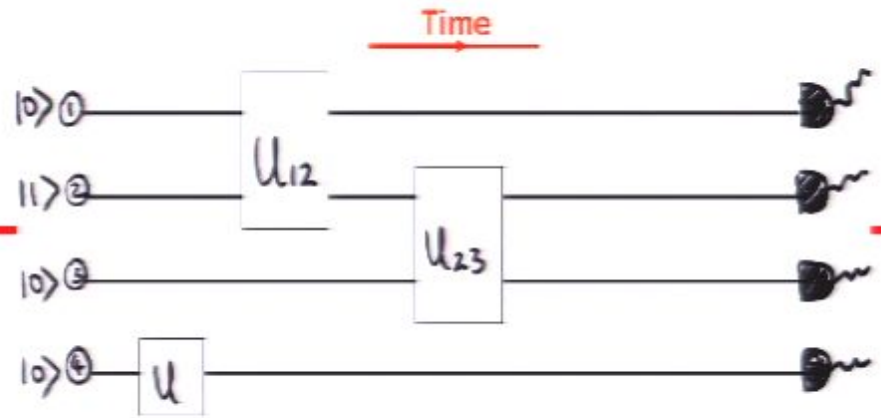
Time
|0⟩ 1
|1⟩ 2
|0⟩ 3
|0⟩ 4
U12
U23
U

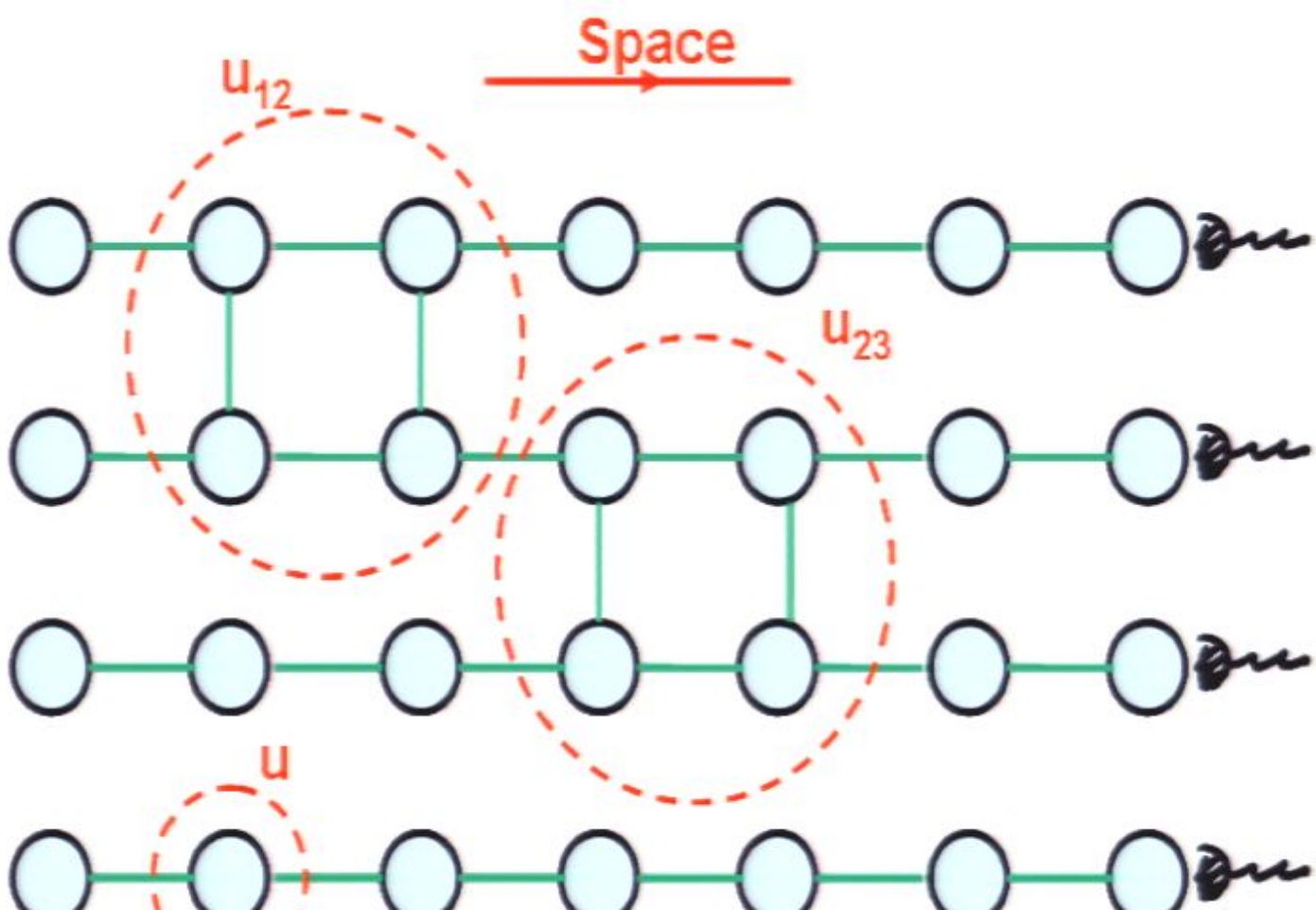
Space
u12
u23
u

So how do we build a photonic cluster state?

So how do we build a photonic cluster state?

No easy way to get photons to interact

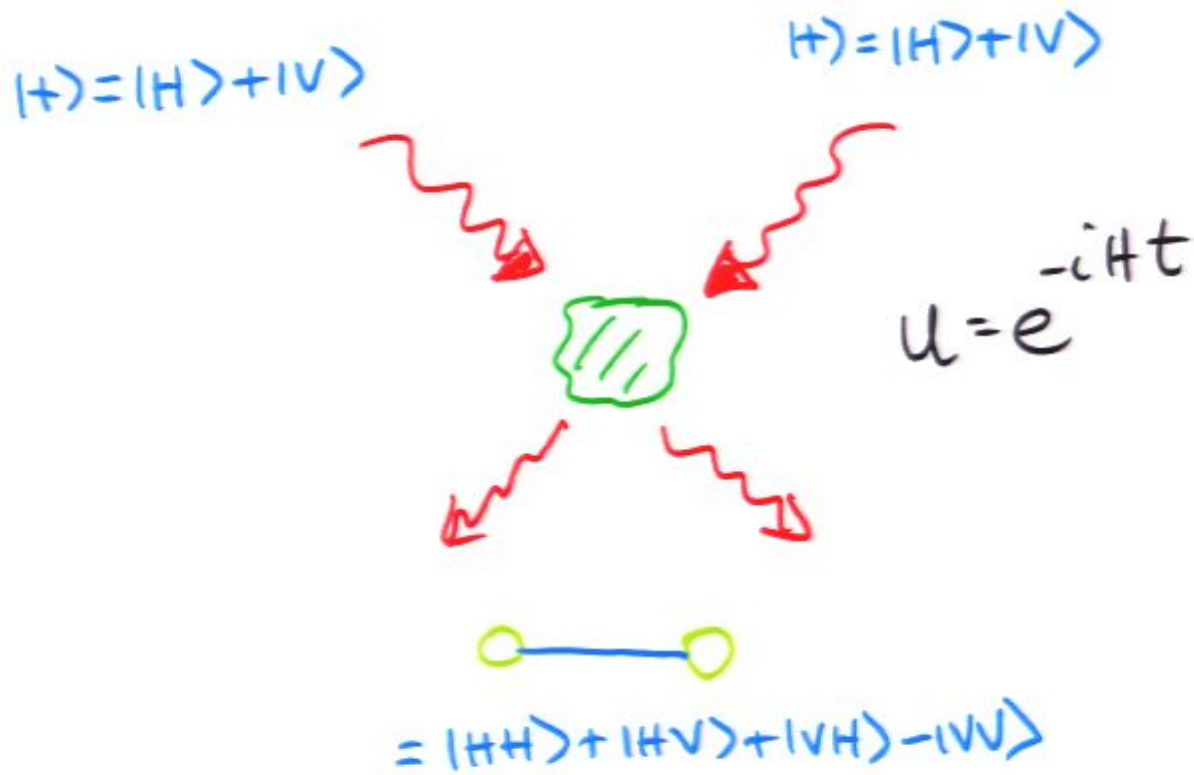

Strain induced self-assembled quantum dots

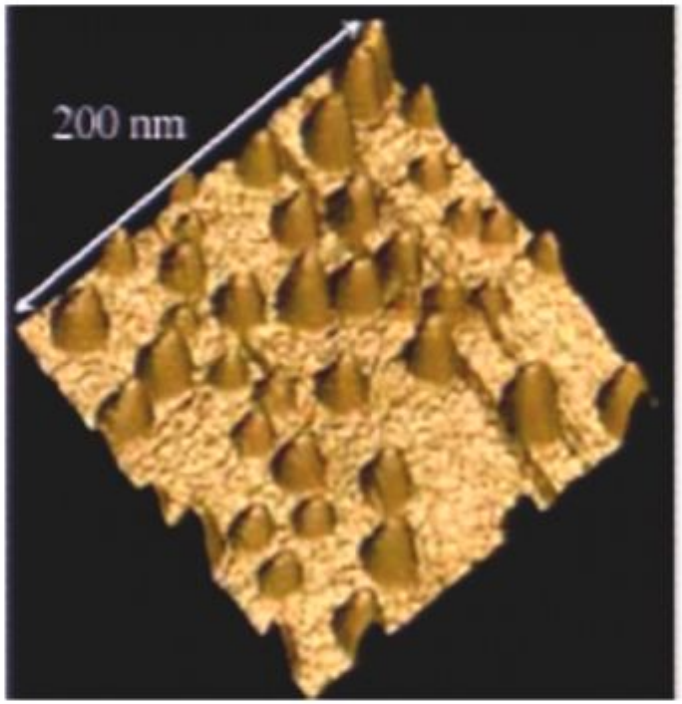

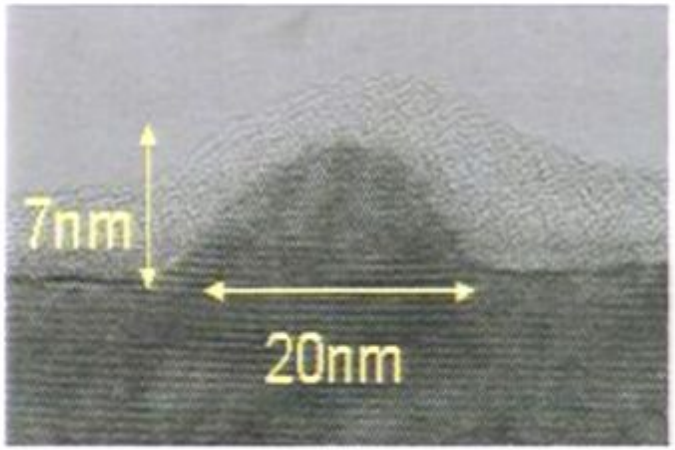

electron - hole recombination

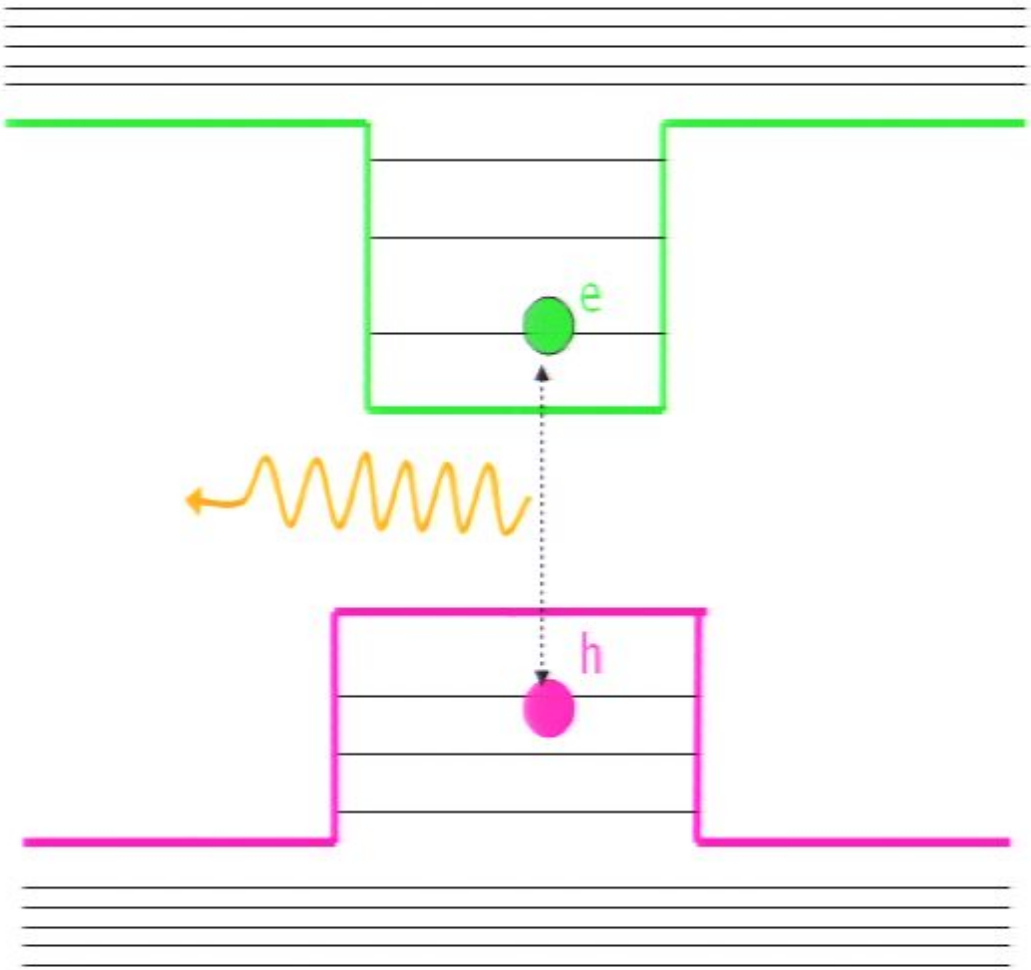

Optical transitions

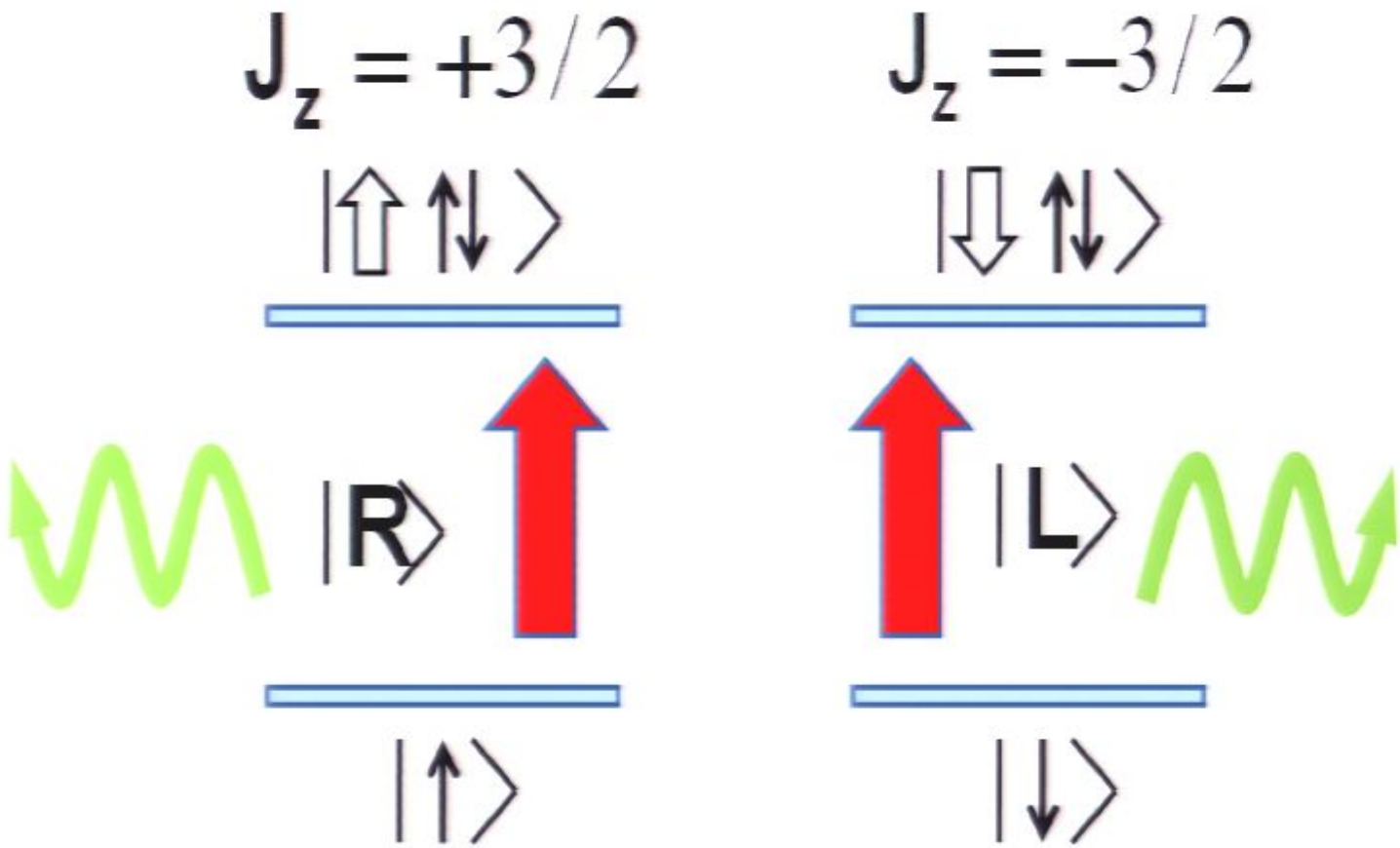

$$|\uparrow\rangle + |\downarrow\rangle \xrightarrow{\text{excitation}} |\Uparrow\rangle + |\Downarrow\rangle$$

$$\xrightarrow{\text{decay}} |\uparrow\rangle|R\rangle + |\downarrow\rangle|L\rangle$$

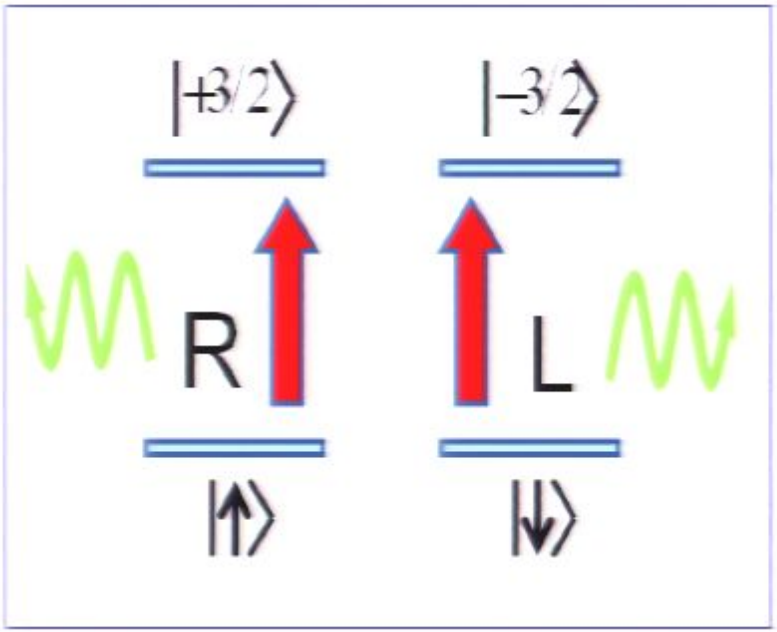

$$\xrightarrow{\text{excitation+decay}} |\uparrow\rangle|R\rangle|R\rangle + |\downarrow\rangle|L\rangle|L\rangle$$

$$\xrightarrow{\text{excitation+decay}} |\uparrow\rangle|R\rangle|R\rangle|R\rangle + |\downarrow\rangle|L\rangle|L\rangle|L\rangle$$

GHZ state

A crucial ingredient

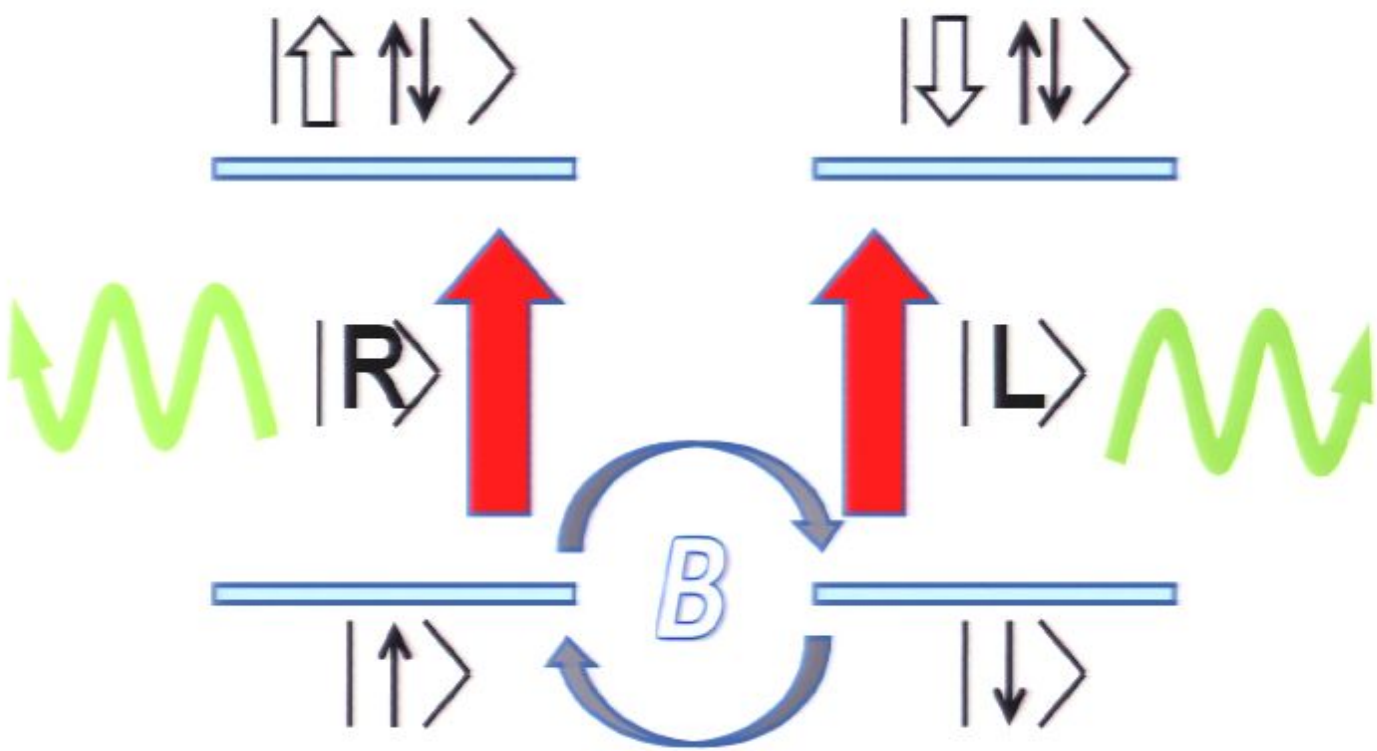

Add in-plane (xy) static Magnetic field

An ideal cluster state machine gun

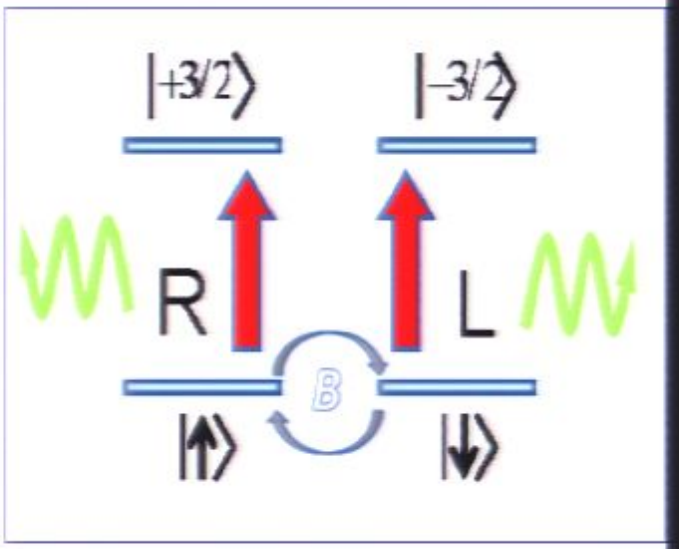

$$|\uparrow\rangle \xrightarrow{\text{evolve}} |\uparrow\rangle + |\downarrow\rangle$$

$$\xrightarrow{\text{exc+dec}} |\uparrow\rangle|R\rangle + |\downarrow\rangle|L\rangle$$

$$\xrightarrow{\text{evolve}} \left(|\uparrow\rangle + |\downarrow\rangle\right)|R\rangle + \left(|\uparrow\rangle - |\downarrow\rangle\right)|L\rangle$$

$$\xrightarrow{\text{exc+dec}} \left(|\uparrow\rangle|R\rangle + |\downarrow\rangle|L\rangle\right)|R\rangle + \left(|\uparrow\rangle|R\rangle - |\downarrow\rangle|L\rangle\right)|L\rangle$$

An ideal cluster state machine gun

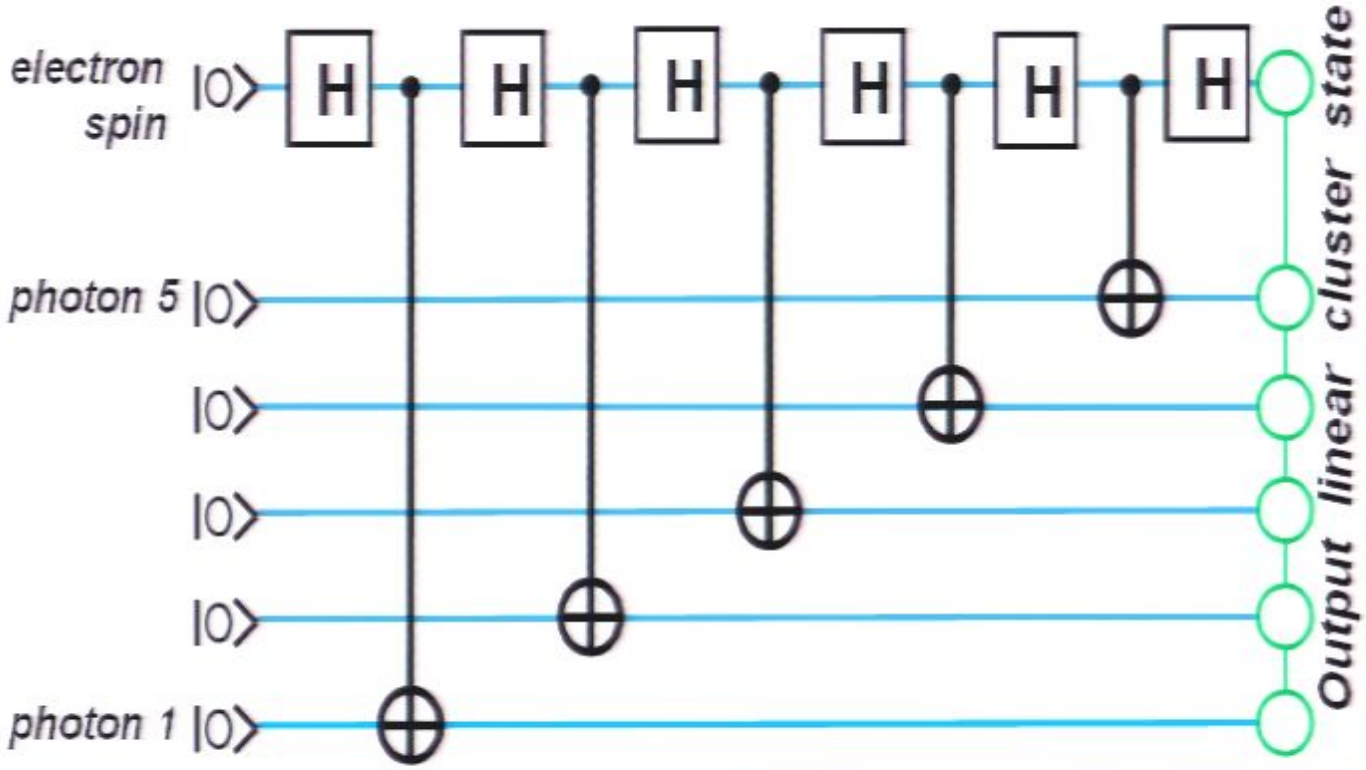

$$C_{NOT} = \begin{array}{l} |00\rangle \rightarrow |00\rangle \\ |01\rangle \rightarrow |01\rangle \\ |10\rangle \rightarrow |11\rangle \\ |11\rangle \rightarrow |10\rangle \end{array}$$

An ideal cluster state machine gun

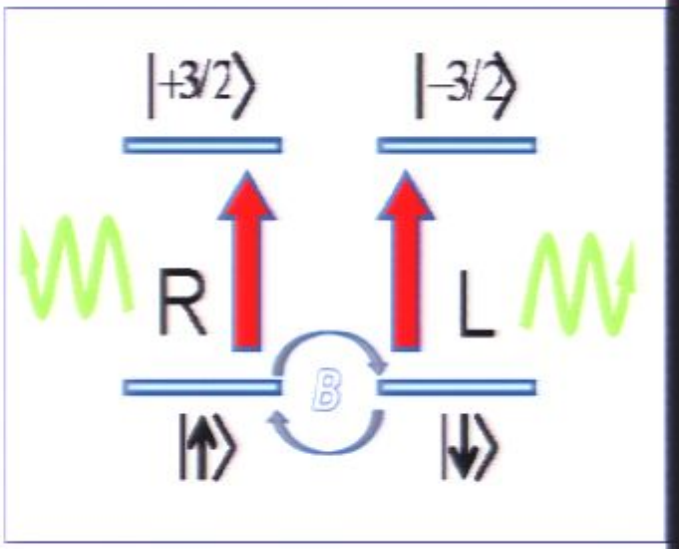

$$|\uparrow\rangle \xrightarrow{\text{evolve}} |\uparrow\rangle + |\downarrow\rangle$$

$$\xrightarrow{\text{exc+dec}} |\uparrow\rangle|R\rangle + |\downarrow\rangle|L\rangle$$

$$\xrightarrow{\text{evolve}} \left(|\uparrow\rangle + |\downarrow\rangle\right)|R\rangle + \left(|\uparrow\rangle - |\downarrow\rangle\right)|L\rangle$$

$$\xrightarrow{\text{exc+dec}} \left(|\uparrow\rangle|R\rangle + |\downarrow\rangle|L\rangle\right)|R\rangle + \left(|\uparrow\rangle|R\rangle - |\downarrow\rangle|L\rangle\right)|L\rangle$$

An ideal cluster state machine gun

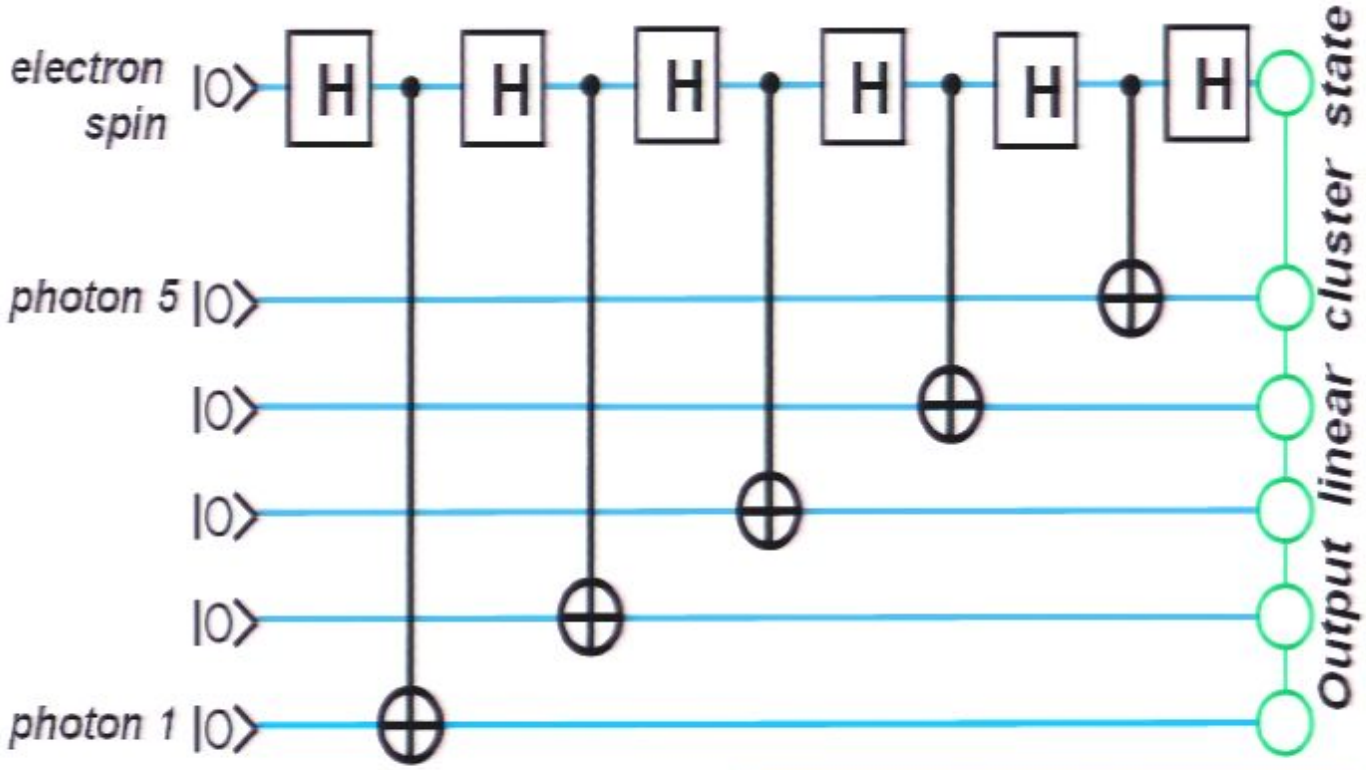

$$C_{NOT} = \begin{array}{l} |00\rangle \rightarrow |00\rangle \\ |01\rangle \rightarrow |01\rangle \\ |10\rangle \rightarrow |11\rangle \\ |11\rangle \rightarrow |10\rangle \end{array}$$

Imperfections

- Non-zero lifetime of the excited state
- Interaction of spin with its environment:
  - Dephasing (T_2 time)
  - Spin relaxation (T_1 time)
- Photon loss
- Imperfect selection rules (light-heavy hole mixing)

Imperfections

- Non-zero lifetime of the excited state
  - Spin state entangled with photon wave packet
- Interaction of spin with its environment:
  - Dephasing (T_2 time)
  - Spin relaxation (T_1 time)

Spin decoherence

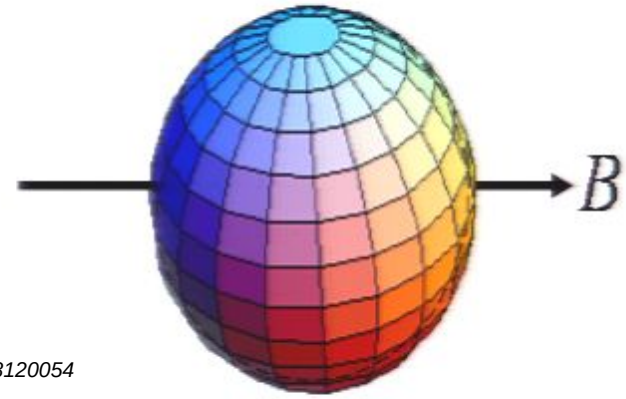

$$T_1 \gg T_2 > \tau_{\text{decay}}$$

Imperfections

- Non-zero lifetime of the excited state
  - Spin state entangled with photon wave packet
- Interaction of spin with its environment:
  - Dephasing (T_2 time)
  - Spin relaxation (T_1 time)

Spin decoherence

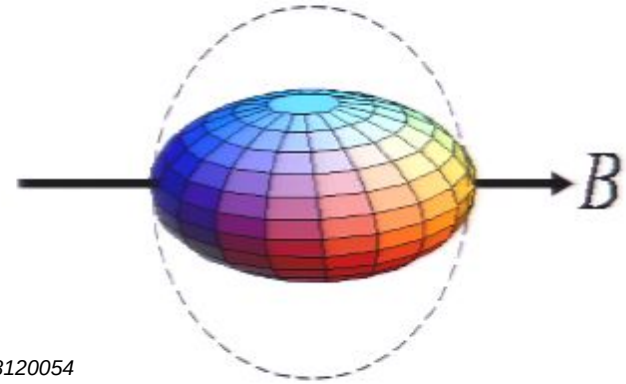

$$T_1 \gg T_2 > \tau_{\text{decay}}$$

Spin decoherence

- **Does the state degrade with number of photons (time)?**
- **Is the process limited by the T_2 *time?***

Spin decoherence

- **Does the state degrade with number of photons (time)?**
- **Is the process limited by the T_2 *time?***

NO

Spin decoherence

- **Does the state degrade with number of photons (time)?**
- **Is the process limited by the T_2 *time?***

NO

- **Process can continue irrespective of T_2**
- Errors **localize**: constant, independent probability of error on each photon.

Localization of errors

$$\rho_S = \mathrm{Tr}_{\mathrm{env}}(\rho) = p\tilde{\rho}_S + (1-p)Y\tilde{\rho}_S Y$$

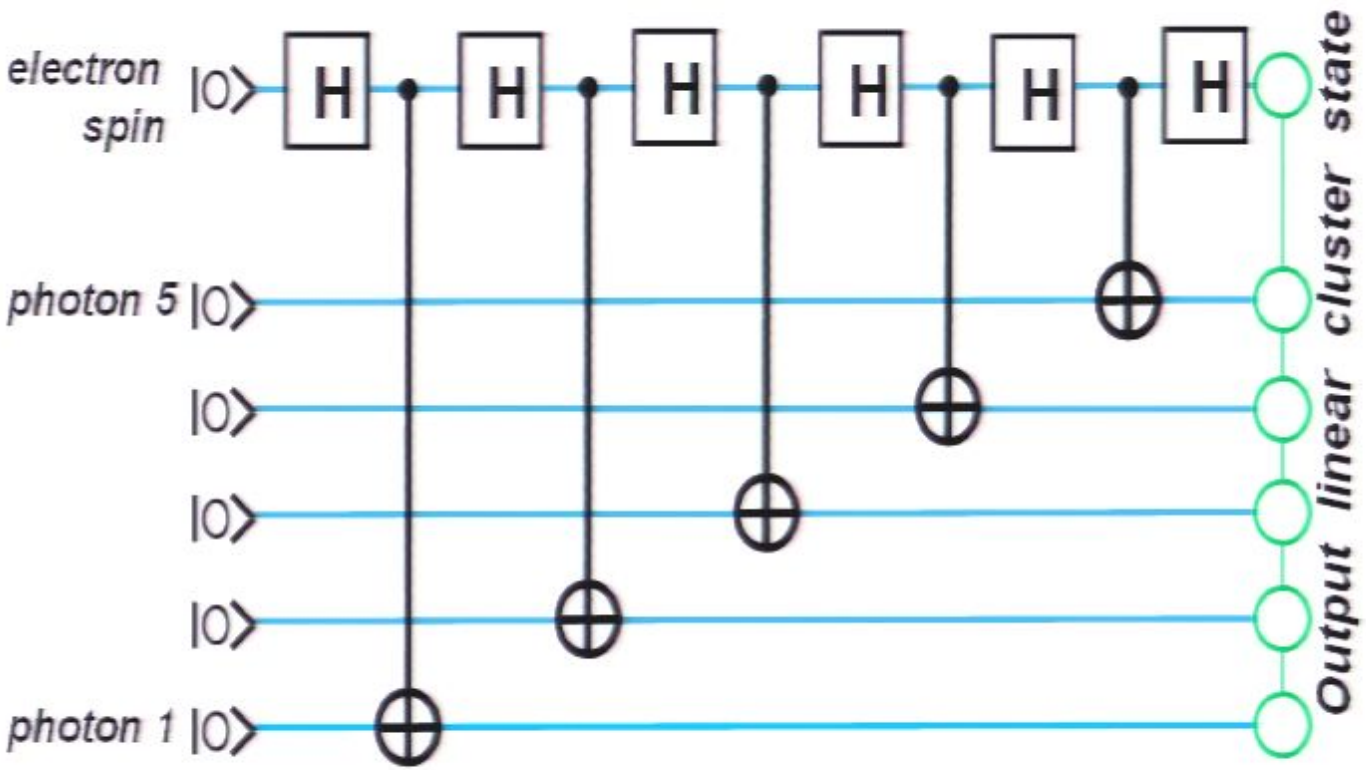

Localization of errors

$$\rho_S = \mathrm{Tr}_{\mathrm{env}}(\rho) = p\tilde{\rho}_S + (1-p)Y\tilde{\rho}_S Y$$

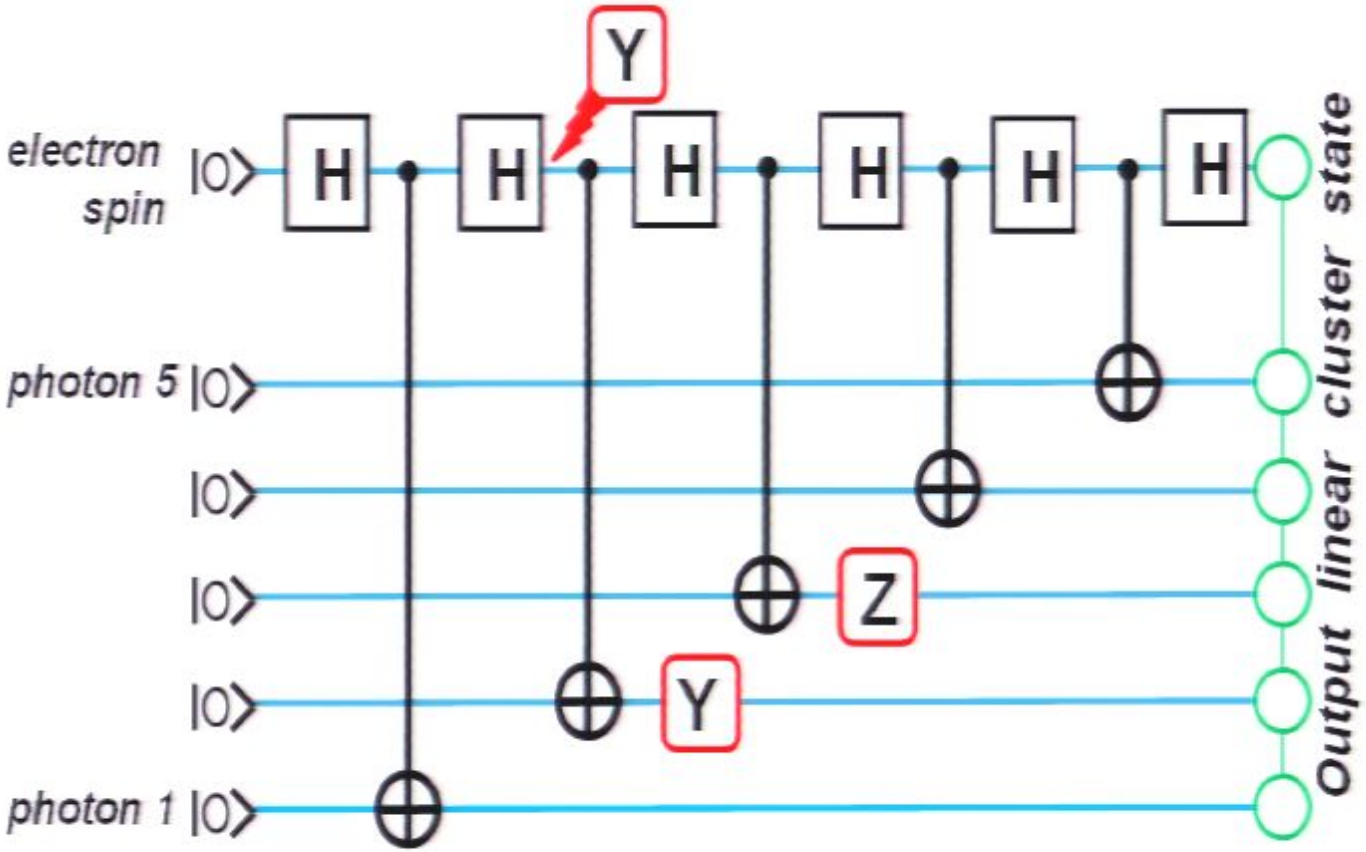

Localization of errors

$$\rho_S = \mathrm{Tr}_{\mathrm{env}}(\rho) = p\tilde{\rho}_S + (1-p)Y\tilde{\rho}_S Y$$

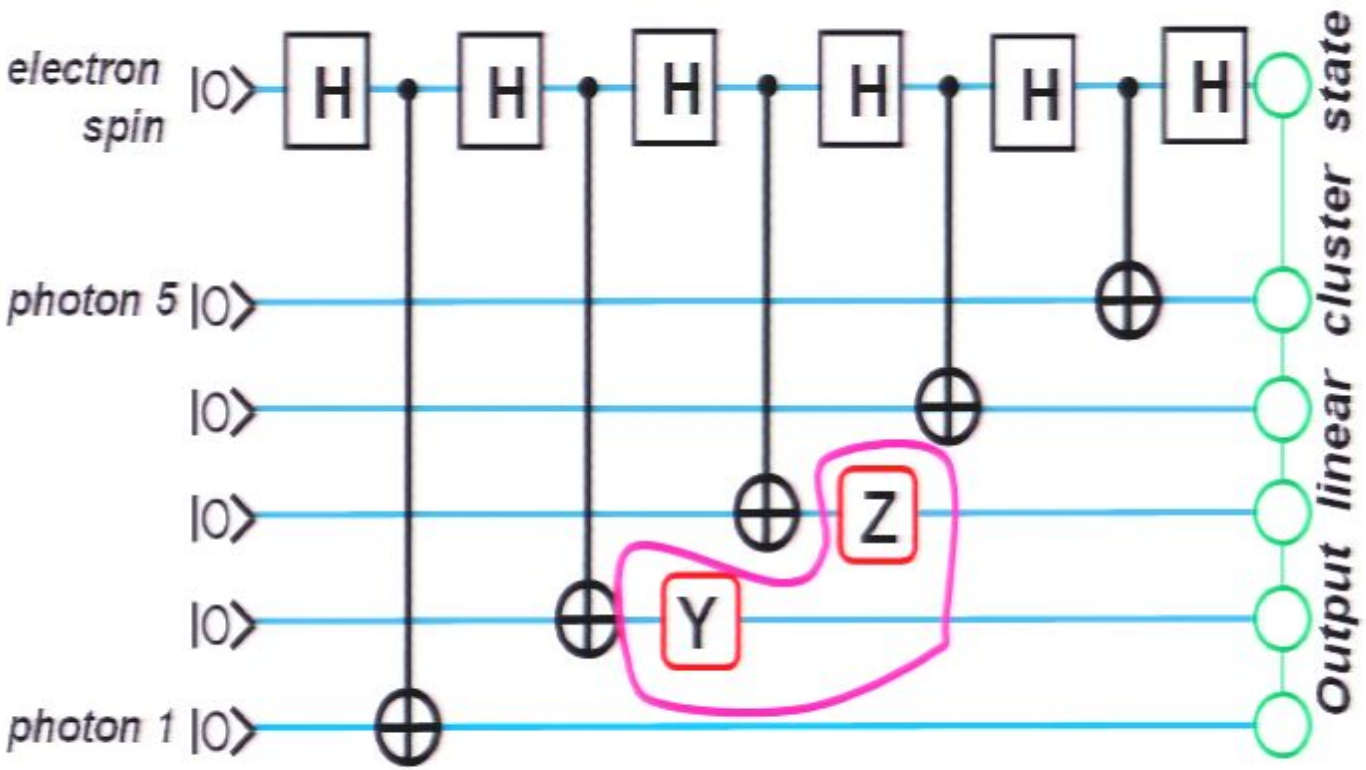

Probability of error

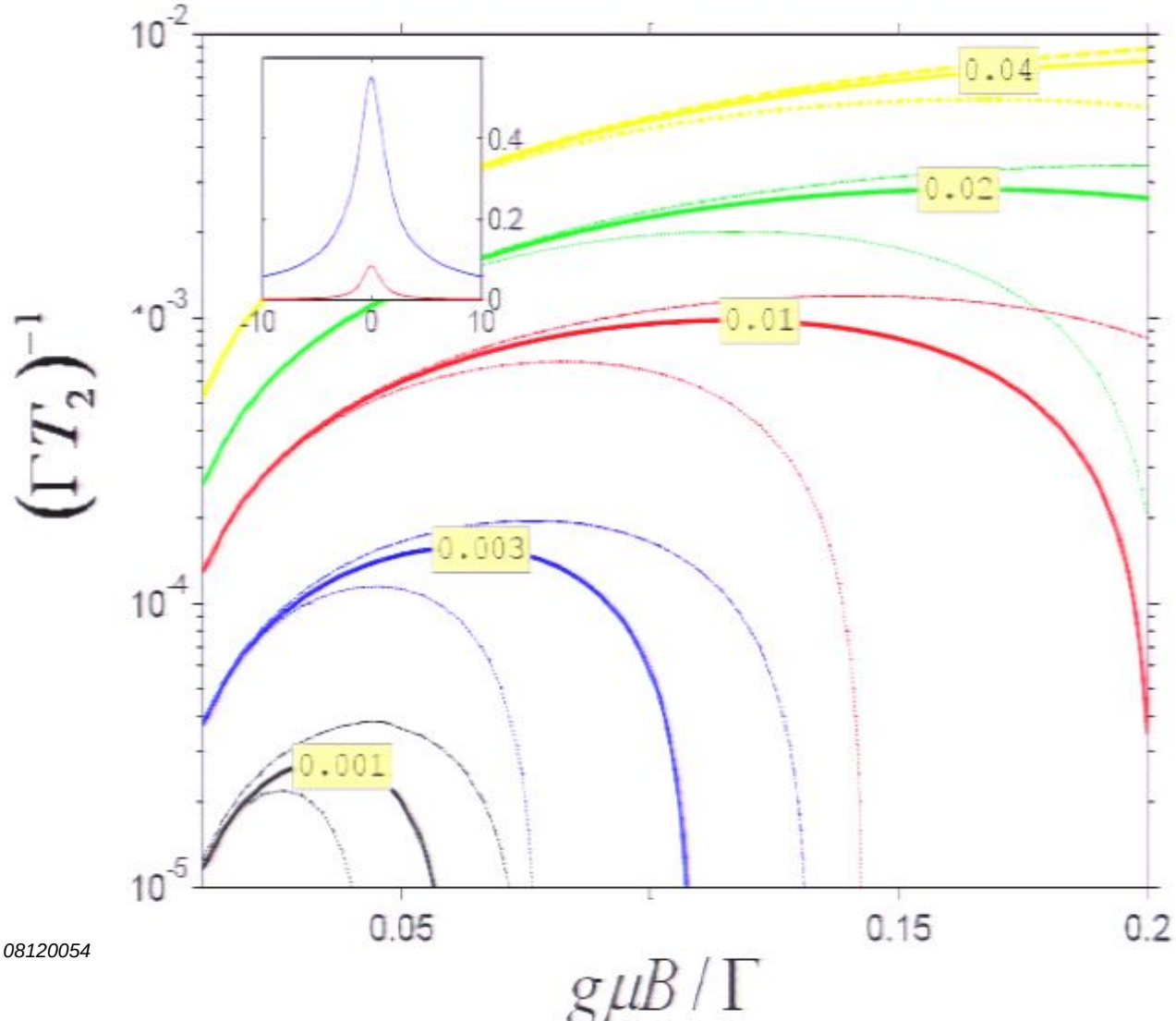

Energy scales

$1/\Gamma \simeq 100\ \mathrm{ps}$

$T_2^* \simeq 10\ \mathrm{ns}$

$T_2 > 1\ \mu\mathrm{s}$

$B \approx 20\ \mathrm{mT}$

Constructing 2D cluster states

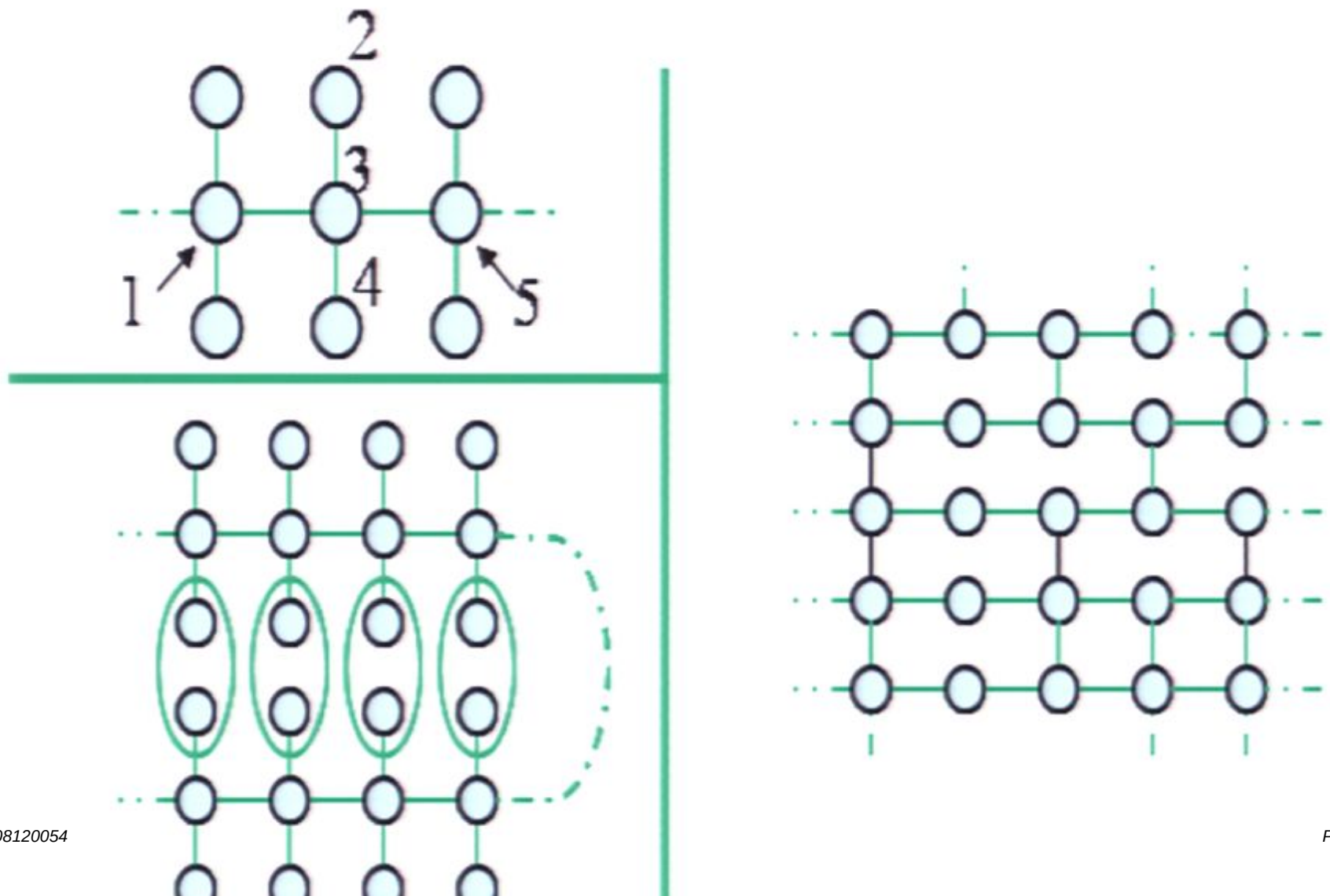

Summary and outlook

- Single quantum dots can large strings of 1D cluster states $\longrightarrow$ 2D clusters.
- Errors localize
- Process can proceed for times $\gg T_2, T_1$
- Outlook:
  - Coupling a number of quantum dots
  - Other single photon sources
  - Better bounds for non markovian spin baths.

Probability of error

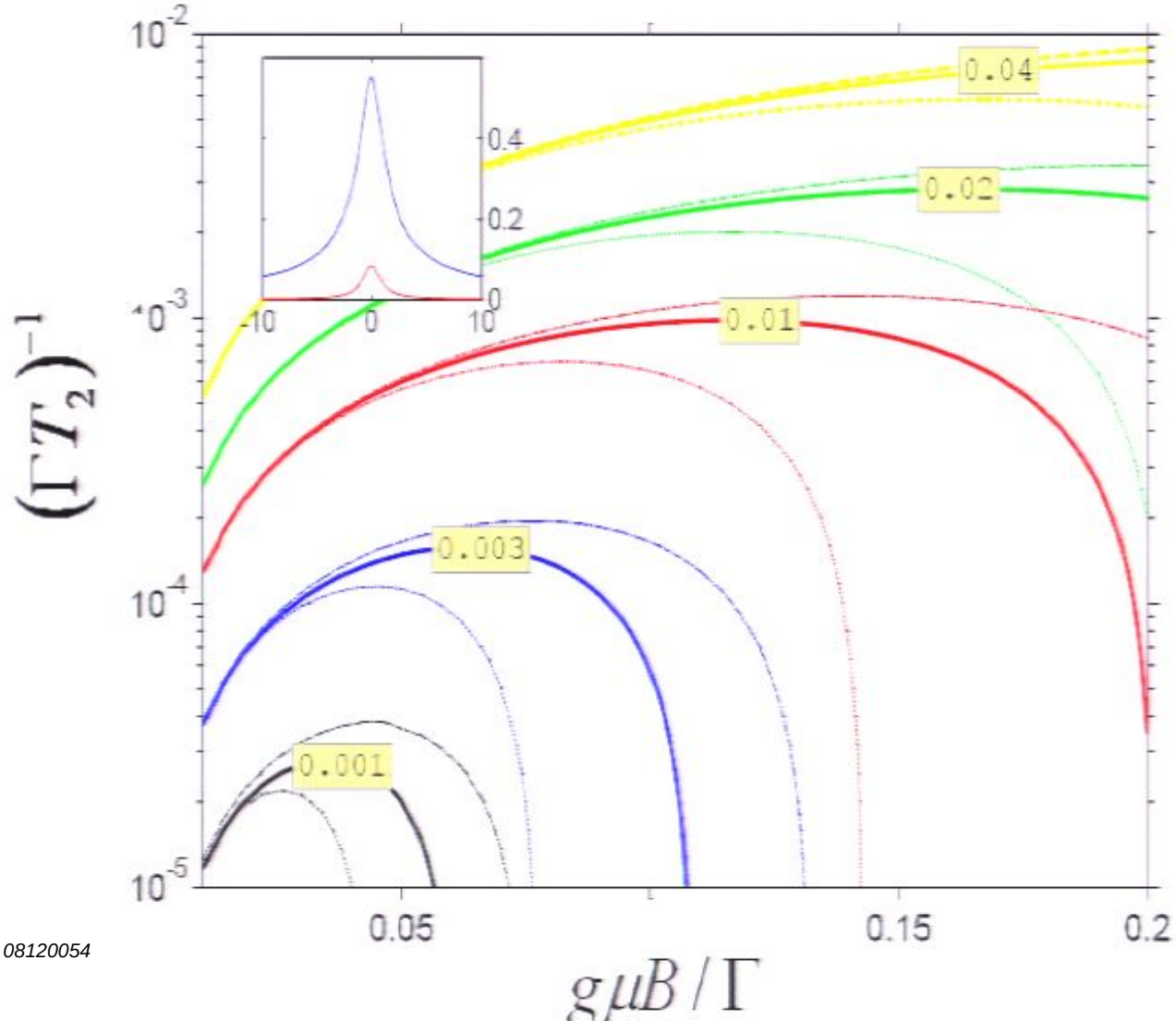

Energy scales

$1/\Gamma \simeq 100\ \mathrm{ps}$

$T_2^* \simeq 10\ \mathrm{ns}$

$T_2 > 1\ \mu\mathrm{s}$

$B \approx 20\ \mathrm{mT}$

Summary and outlook

- Single quantum dots can large strings of 1D cluster states $\longrightarrow$ 2D clusters.
- Errors localize
- Process can proceed for times $\gg T_2, T_1$
- Outlook:
  - Coupling a number of quantum dots
  - Other single photon sources
  - Better bounds for non markovian spin baths.

Thank you

Spin-bath Hamiltonian

$$H = H_e + H_N + H_{eN} + H_{NN}$$

$$H_{eN} = \sum_n a_n \mathbf{S_e} \cdot \mathbf{J_n}$$

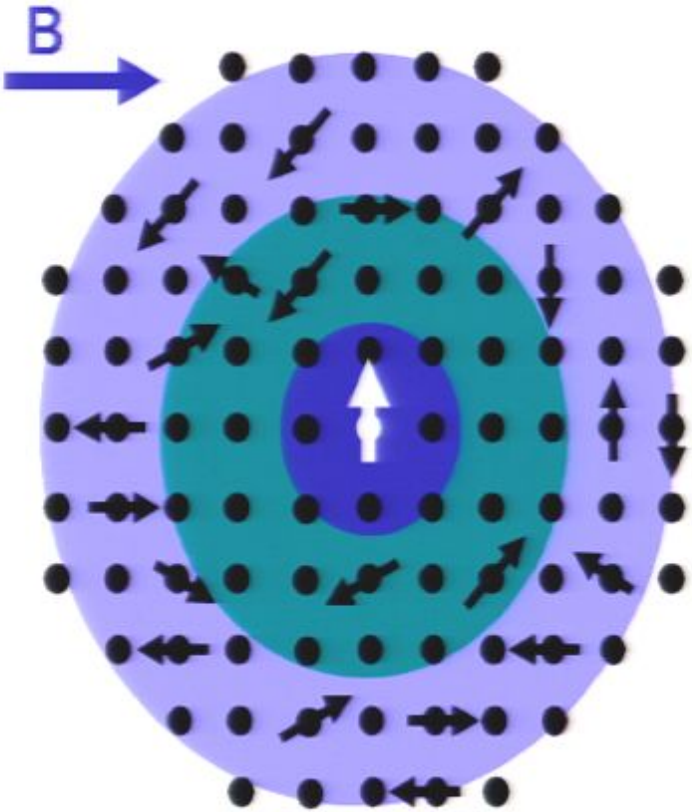

Energy scales

H_{eN}	$\alpha_n \sim 10^6\ \mathrm{sec}^{-1}$
H_{NN}	$\beta_n \sim 10^2\ \mathrm{sec}^{-1}$
H_e	$\mu B \sim 10^{11}\ \mathrm{sec}^{-1}\ \mathrm{T}^{-1}$

Effective Hamiltonian

$$H_{eff} = H_e + H_N + \sum_{\pm} |\pm\rangle H_{\pm} \langle\pm|$$

Spin-bat miltonian

Next
Previous
Last Viewed
Go to Slide
Custom Show
Screen
Pointer Options
Help
Pause
End Show

$$H = H_e + H_N + H_{eN} +$$

$$H_{eN} = \sum_n a_n \mathbf{S_e} \cdot \mathbf{J_n}$$

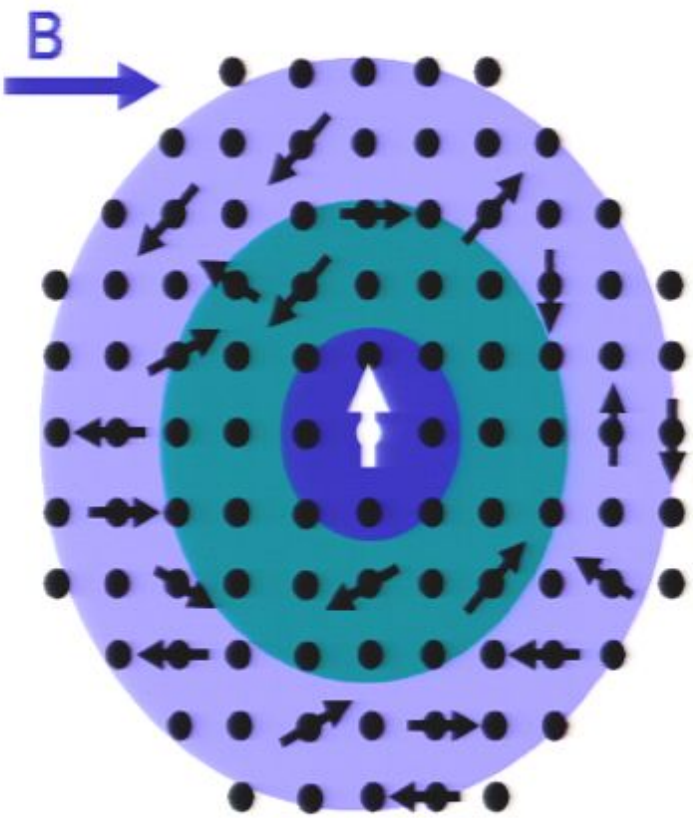

Energy scales

H_{eN}	$\alpha_n \sim 10^6\ \mathrm{sec}^{-1}$
H_{NN}	$\beta_n \sim 10^2\ \mathrm{sec}^{-1}$
H_e	$\mu B \sim 10^{11}\ \mathrm{sec}^{-1}\ \mathrm{T}^{-1}$

Effective Hamiltonian

$$H_{eff} = H_e + H_N + \sum_{\pm} |\pm\rangle H_{\pm} \langle\pm|$$